PLC - Micro Modular Series

MiBRX™ - 6M

Features:

- Modular PLC with Pluggable / Independent Display
- Flexible I/O Card Selection for customized applications
- Expandable Architecture via I/O Expansion Modules
- RS485 Communication – MODBUS RTU Protocol
- Real-Time Clock (RTC) with Time Switch Function
- Optional Ethernet communication
- Serial Printing Support*
- Windows-Based Software for Ladder Programming and HMI Configuration

CE RoHS compliant PATENTED

Technical Specifications

Display Specifications	**MiBRX-DSP-6M-8-2-08-A**
Display Type	LCD (Backlit)
No of Characters	2 Lines x 8 Characters
Font Size	5 x 7 mm
No. of Keys	6 keys (5 user configurable)
No of IO Slots	6

Note : *Refer to the IO card and base module compatibility guidelines to ensure effective and valid IO card combinations.*

Digital Input Specifications	**MiBRX-6M-1-1-1-230V**	**MiBRX-6M-2-1-1-0-1-24VDC**	**MiBRX-6M-3-1-1-0-1-24VDC**
No. of Inputs	10+1* + Card Configurations: 2 / 4 / 6	12 + Card Configurations: 2 / 4 / 6	8 + Card Configurations: 2 / 4 / 6
Input Type	PNP		
Voltage Range	5-30V DC		
Input Current	2mA @12V		
Debounce Time	Programmable 1-255ms (Default: 10ms)		
Isolation (power ↔ Input)	Yes		
Isolation (CPU ↔ Input)	Yes for Isolated cards		
Protection against Polarity Inversion	Yes		
Timer Accuracy	0.1% or 2ms (Whichever Greater)		
Response Time	Typical 1m sec (Based on ladder scan time) & 100µ sec for fast Input		
Fast Input			
No. of Channels	1 (FC0 - DI0 & DI1)	2 (FC0 - DI0 & DI1, FC1 - DI2 & DI3)	-
Max Speed	5 kHz		-
Operating Mode	Unidirectional / Bidirectional / Quadrature / Dual uni (5kHz for all) / None		

** Digital input can be configured as analog input (0-10V)*

Analog Input Specifications	
No. of Channels	1 NTC + Card Configurations: 1 / 2 / 3 Inputs
Input Type	J, K, T, R, S, C, E, B, N, L, U, W, PLTNL, mVolt (-5 to 65mV), 0-10V, 0-20mA, NTC, PTC, RTD
Accuracy	0.25% ±1°C (TC), 0.1% ±1°C (RTD) at 25°C, ±0.25% of FS. ±1 count for AI's, ±2°C for NTC
Resolution	12 Bit
Conversion Time	TC - 100ms, RTD - 300ms, 0-10V - 100ms, 0-20mA - 100ms, NTC - 100ms
Linearity	0.1
Max Non-Destructive Input	AIV= 17V, AII=31mA
Channel-to-Channel Isolation	NO
Reverse Polarity Protection	TC - YES, RTD - N/A, 0-10V - YES, 0-20mA - YES, NTC - YES
Input Impedance	TC - >330KΩ, RTD - >510KΩ, 0-10V - >330KΩ, 0-20mA - >100Ω, NTC - >2KΩ

Digital Output Specifications			
No. of Outputs	4 relay + Card configurations: 2 / 3 / 4 / 5 (NO) type relay	As per Card Configurations: 2 / 3 / 4 / 5 (NO) type Relay	
Contact Rating	5A @250V AC (resistive load), 5A @30V DC (resistive load)		
Relay Type	SPST		
Isolation (CPU ↔ Output)	2.5kV		
Isolation (Output ↔ Output)	NA		
Response Time	20ms		
Mechanical Life	5 Million Operations		

Note : *Use of RO and AO cards are limited in 230VAC variants. Mixed usages for RO/AO limits are auto-managed in Selpro settings or refer to product manual for details*

Digital Output - Transistor	
No. of Outputs	As per Card Configurations: 4 Transistorized
Output Rating	100mA @24V DC (current sourcing output), 18-30V DC (External Supply)
Output Type	PNP (Source)
Short Circuit Protection	Yes
Isolation (CPU ↔ Output)	2.5kV
Isolation (Output ↔ Output)	No
Polarity Inversion Protection	Yes
Response Time	10ms
Nominal Load	240Ω (likely referring to the typical load resistance)
Breaking Current	110mA (maximum current that can be interrupted)

Analog Output Specifications	
No. of Channels	As per Card Configurations: 1 / 2
Output Range	0-10V DC / 0-20mA DC
Resolution	12 Bits
Load Limit	0-10 VDC ≥ 1 kΩ, 0-20mA <= 500Ω
Digital Resolution	0.0-100.0% = 0-10.000V DC, 0.0-100.0% = 0-20.000mA
Conversion Time	100ms
Isolation (CPU ↔ Output)	Yes for Isolated cards
Isolation (Output ↔ Output)	No
Output error @25 °C	±0.25% of Full Scale
Linearity	0.10%

Note : *Use of RO and AO cards are limited in 230VAC variants. Mixed usages for RO/AO limits are auto-managed in Selpro settings or refer to product manual for details*

Programming & Memory			
Programming Software	Windows-Based Ladder & HMI Configuration		
Program Memory	240 KB	480 KB	
Data Memory	1 MB		
EEPROM	4 KB	1 KB	4 KB
Upload Memory	NA		
Max Objects	5000 (subject to Memory Availability)		
Min Scan Time	200µs		
Typical Scan Time	1ms (Depends on Ladder Logic Complexity)		

Note : *set jumpers as per the manual for PD & Wi-Fi Card before use.*

Functional Features	
Timer Operational Modes	On Delay, Off Delay, Special Timer (Up/Down), Pulse Timer, 1ms Timer*
Counter Modes	Up Counter, Down Counter, Up/Down Counter, Special [Up/Down] Counter
Other Functional Blocks	Array, For Next, Totalizer, Rate Totalizer, Analog Input, Scaling,FTC, Hysteresis, PIDT, Rampsoak, Communication
Memory Retention	10 years (2 KB)
Real-Time Clock (RTC)	Yes
Clock Drift	Maximum ±4 seconds per day

**Limited to 4 Nos*

Communication Specifications:			
Communication Port	RS485 [Slave], RS485 [Master] for Expansion	RS485 [Slave], RS485 [Master] for Expansion, Ethernet Slave, USB (Micro-B)	RS485 [Slave], RS485 [Master] for Expansion, Ethernet [Server / Client], USB (Micro-B)
Communication Protocol	MODBUS RTU	MODBUS RTU, MODBUS TCP (Ethernet), USB 2.0	MODBUS RTU, MODBUS TCP (Ethernet), MQTT, USB 2.0
Connector	2 Wire	MODBUS: 2-Wire, Ethernet: RJ45, USB: Micro-B	
Transmission Mode	MODBUS - Half Duplex	MODBUS - Half Duplex, ETHERNET - Full Duplex, USB - Half Duplex	
Transmission Speed	MODBUS: 2400, 4800, 9600, 19200, 38400, 57600, 115200 bps, Ethernet: 10/100 Mbps, USB-B: 12 Mbps / 480 Mbps		
Data Bits	MODBUS: 7 or 8		
Parity	MODBUS : None, Odd, Even, Space, Mark		
Stop Bits	MODBUS: 1 or 2		
Environmental Specifications			
Operating Temp	0°C to 55°C		
Storage Temp	-20°C to 70°C		
Humidity	10% to 95% RH (Non-Condensing)		
IP rating	Display: IP50, Terminals: IP20		
Mechanical Specifications			
Weight	270 grams	250 grams	
Mounting	DIN Rail Mountable		
Dimensions in mm (WHD)	105 x 94 x 67		
Auxiliary Supply Specifications			
Supply Voltage	With Retention: 180-270V AC @50/60 Hz Without Retention: 90-270V AC @50/60 Hz	18-30V DC	
Inrush Current	5A	2.3A	
Power Consumption	8VA	8W	
Polarity Inversion Protection	YES		
Isolation (Power ↔ Communication)	YES		
Source Supply Output	24V DC, 50mA	-	

Note: A maximum of 25 variables of type VAR_IN_OUT and VAR_OUTPUT (each 32-bit) can be retained when operating at 110V.

Terminal Connections

MiBRX-6M-1-1-1-230V

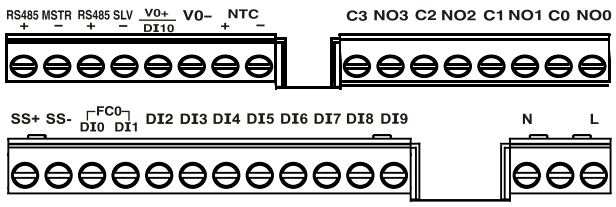

MiBRX-6M-2-1-1-0-1-24DC

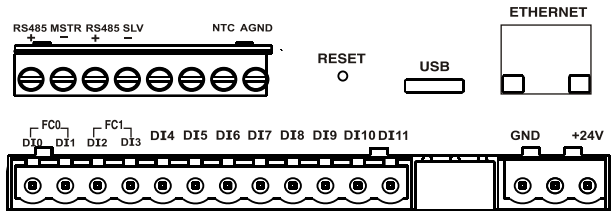

MiBRX-6M-3-1-1-0-1-24VDC

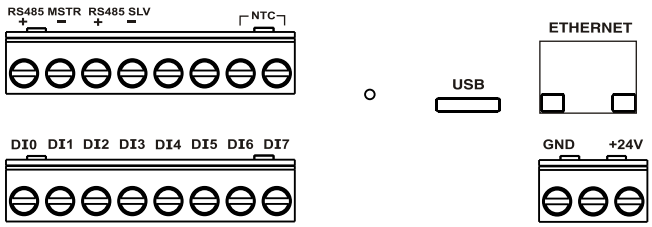

Dimensions (All are in mm)

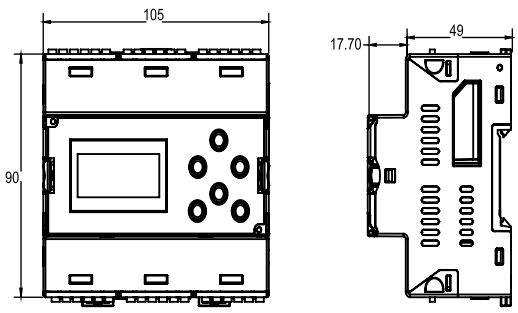

Ordering information

Product code	Description	Certification
MiBRX-6M-1-1-1-230V	MiBRX 6M Base module - 230VAC - 6 Slots, 11DI (incl 1FI, 1AI-V), + 4RO, NTC, RTC, Master	CE RoHS
MiBRX-6M-2-1-1-0-1-24VDC	MiBRX 6M Base module - Isolated 24VDC PS - 6 Slots, 12 DI, Master, ETHERNET* & RTC.	CE RoHS
MiBRX-6M-3-1-1-0-1-24VDC	MiBRX 6M Base module - Isolated 24VDC PS - 6 Slots, 8 DI, Master, ETHERNET(Slave & Master) & RTC.	CE RoHS

Supported display modules

Product code	Description	Certification
MiBRX-DSP-6M-8-2-08-A	MiBRX Display 6M - LCD Text (8x2)	CE RoHS
MiBRX-DSP-AP-6M	MiBRX 6M Adapter Plate for Extending display	CE RoHS

Accessories (To Be Ordered Separately)

Product Code	Description
Power Supplies	
RPS60-24-CE	60W, 24V/2.5A DIN rail mounted power supply in plastic housing - CE Certified
Cables & Communication Accessories	
AC-USB-RS485-02	Protocol Converter Cable - USB to RS485 (2 wire)
For MODBUS Networking	
AC-USB-RS485-03	Protocol Converter Cable - USB to RS485 (RJ25)
ACH-004-CE-RoHS	Expansion Cable - RJ25 to RJ25 (6Pin)
AC-IOEXP-03-CE-RoHS	Communication Adapter
Relay Modules	
ERLYMD-2-1-S8-1CO-24V-CE-RoHS	8 Channel 1 Change Over, Communication based
Expansion modules on Master RS485	
EXP FLEX 2M	Expansion Slot – For Flexys IO Cards
EXP FLEX 2M V3	Independent Remote IO base - For Flexys IO Cards
For Extending Display (*Use external power supply)	
MIBRX-DSP-AP-6M	MiBRX 6M Adapter Plate for independent display
ACH-004-CE-RoHS	Expansion Cable – RJ25 to RJ25 (6Pin)
MiBRX-DSP-IND-96-8-0-00-B	MiBRX Independent Display 96x96 - Customized, 14 & 7 Seg, Bar Graphs, Speedometer
MiBRX-DSP-IND-96-8-0-00-C*	MiBRX Independent Display 96x96 - 3.5 Inch Graphic Touch
MiBRX-DSP-IND-96-8-2-16-B	MiBRX Independent Display 96x96 - LCD Text (16x2)
MiBRX-DSP-IND-96-8-4-16-B	MiBRX Independent Display 96x96 - LCD Text (16x4)
Software - www.selec.com/software	
Selpro	Windows-based software for ladder logic and built-in HMI programming
USB to Serial Driver	USB to Serial cable drivers

Supported I/O Cards

IO Cards	Description	Certification
MiBRX-SC-DI0X**	MiBRX Slot Card - 4 / 5 / 6 Digital Inputs	CE RoHS
MiBRX-SC-DI05-230V AC	MiBRX Slot Card - 5 Digital Inputs 230V (AC)	CE RoHS
MiBRX-SC-TO04	MiBRX Slot Card - 4 Transistor Outputs	CE RoHS
MiBRX-SC-RO0X*	MiBRX Slot Card - 2 / 3 / 4 / 5 Relay Outputs	CE RoHS
MiBRX-SC-DI02-TO02	MiBRX Slot Card - 2 Digital inputs & 2 Transistor Outputs	CE RoHS
MiBRX-SC-DI02-RO03	MiBRX Slot Card - 2 Digital Inputs & 3 Relay Outputs	CE RoHS
MiBRX-SC-AI0X-V **	MiBRX Slot Card - 2 / 3 Analog Inputs - Voltage	CE RoHS
MiBRX-SC-AI0X-I **	MiBRX Slot Card - 2 / 3 Analog Inputs - Current	CE RoHS
MiBRX-SC-AI02-V-I **	MiBRX Slot Card - 2 Analog Inputs - 1 Voltage & 1 Current	CE RoHS
MiBRX-SC-AI02-TC **	MiBRX Slot Card - 2 Analog Inputs - Thermocouple	CE RoHS
MiBRX-SC-AI03-2TC-1I-ISO	MiBRX Slot Card - 3 Analog Inputs - 2 Thermocouple (Isolated) & 1 Current (Isolated)	CE RoHS
MiBRX-SC-AI02-RTD **	MiBRX Slot Card - 2 Analog Inputs - RTD	CE RoHS
MiBRX-SC-AI03-2RTD-1I-ISO-P	MiBRX Slot Card - 3 Analog inputs - 2 RTD (Isolated) & 1 Current (Isolated), With Pluggable Terminals	CE RoHS
MiBRX-SC-AI02-PT1000	MiBRX Slot Card - 2 Analog Inputs - PT1000	CE RoHS
MiBRX-SC-AI02-NTC	MiBRX Slot Card - 2 Analog Inputs - NTC	CE RoHS
MiBRX-SC-AI02-PTC	MiBRX Slot Card - 2 Analog Inputs - PTC	CE RoHS
MiBRX-SC-DI02-AI01-T	MiBRX Slot Card - 2 Digital Inputs & 1 Analog Input - TC/RTD	CE RoHS
MiBRX-SC-AO01V/I *	MiBRX Slot Card - 1 Analog Output (Voltage/Current)	CE RoHS
MiBRX-SC-AO02-V-I *	MiBRX Slot Card - 2 Analog Outputs - 1 Voltage & 1 Current (Isolated)	CE RoHS
MiBRX-SC-AO02-X-ISO *	MiBRX Slot Card - 2 Analog Outputs - Voltage / Current (Isolated)	CE RoHS
MiBRX-SC-FI02	MiBRX Slot Card - 2 Fast Inputs (10KHz)	CE RoHS
MiBRX-SC-FO01-TO02-N	MiBRX Slot Card - 1 Fast Output (200KHz) & 2 Transistor Output (NPN)	CE RoHS
MiBRX-SC-LC02	MiBRX Slot Card - 2 Analog Inputs - Load Cell (24 Bit)	CE RoHS
MiBRX-SC-DL	MiBRX Slot Card - Datalogging (2MB) & RTC	CE RoHS
MiBRX-SC-WIFI	MiBRX Slot Card - WIFI	CE RoHS
MiBRX-SC-PD	MiBRX Slot Card - Portable Downloader	CE RoHS

***Pluggable card variant available**
**** Pluggable + Isolated (ISO) variant available**
e.g., MiBRX-SC-DI0X-ISO, MiBRX-SC-DI0X-P

Note:
1. Non-Isolated DI cards supports only in Non-ISO variant.
2. Pluggable variant is not available for MiBRX-SC-RO05.
3. Refer to the IO card and base module compatibility guidelines to ensure effective and valid IO card combinations.