Auxiliary Supply specification

[redacted]

Output Specification

[redacted]

Communication

[redacted]

Insulation

[redacted]

Environmental Conditions

[redacted]

Mechanical

[redacted]

Termination

[redacted]

Dimensions (All are in mm)

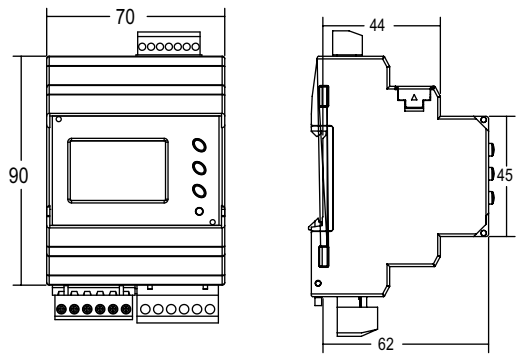

Terminal Connections

MRJ4M-MID

3 Phase 4 Wire - 1 CT

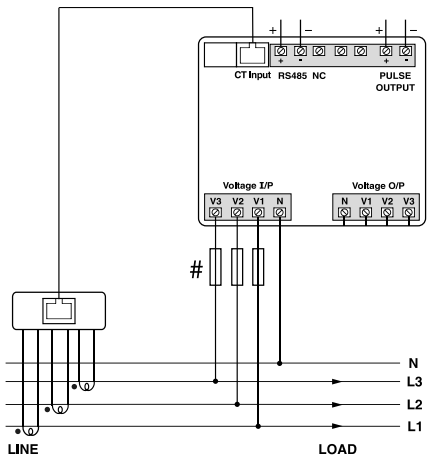

[redacted]

Compliance

Electromagnetic compatibility
IEC/EN61326-1, IEC/EN55011 Class A
IEC/EN61000-4-2, -3, -4, -5, -6, -8, -11
IEC/EN50470-1/3
Accuracy and functionality
IEC/EN50470-1/3
IEC/EN62053-21
IEC/EN62053-23
DIRECTIVE 2014/32/EU
IEC/EN62053-31
Safety
IEC/EN61010

Ordering information

MID CE