2 : Output Specification

	50	50	50	50	50	50
	800	800	800	800	1200	1200
	1.5	1.5	1.5	1.5	1.5	1.5
	100	150	100	150	100	150
	0.8	0.9	0.8	0.9	0.8	0.9
	1	1	1	1	1	1

3 : General Specification

	2500 Vrms	4000 Vrms	2500 Vrms	4000 Vrms	2500 Vrms	4000 Vrms
Ambient Humidity	93% non-condensing					
Heat sink Thermal Resistance:	1°C/W					

4 : Housing Specification

Weight	87.2 g approx
Baseplate	
Material	Glass filled polyester
LED input Status Indicator	Red

5 : Circuit Block Diagram

RSS Series

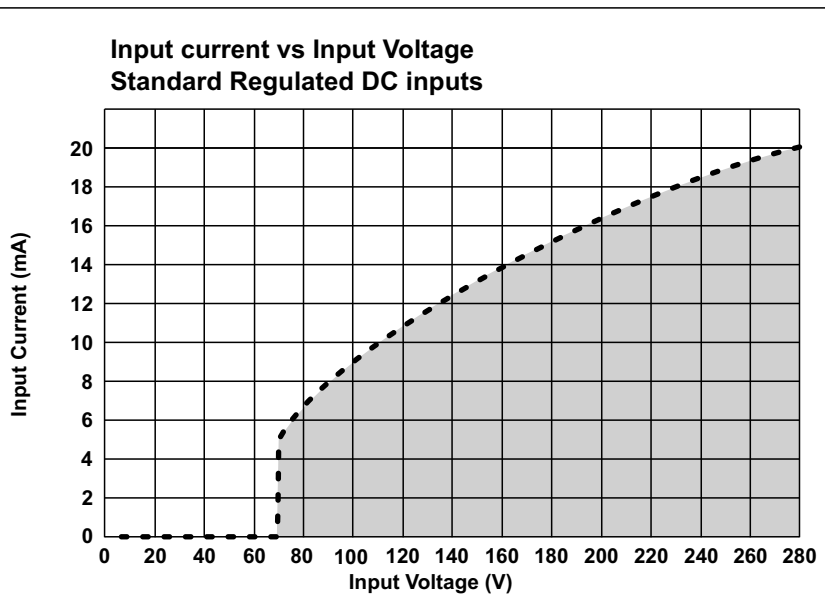

6 : Surge Current Information

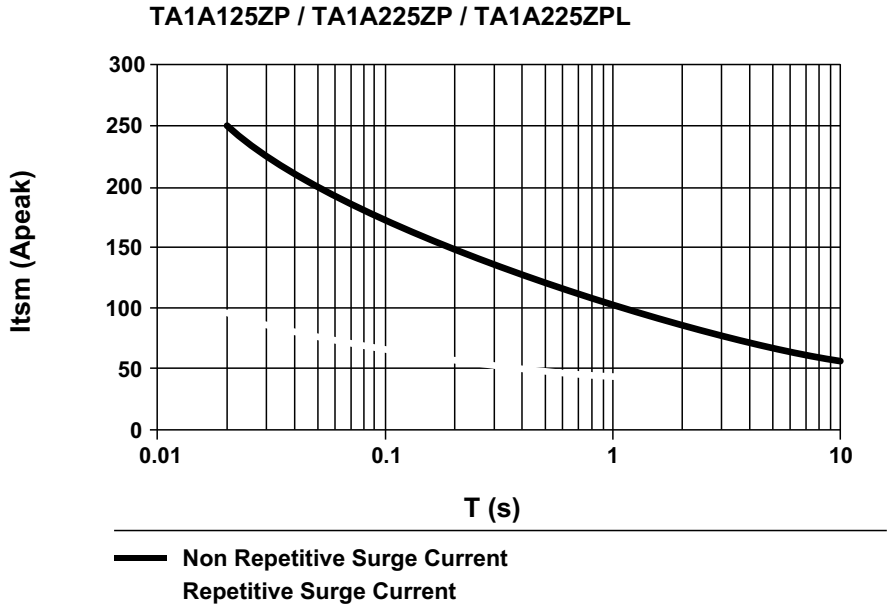

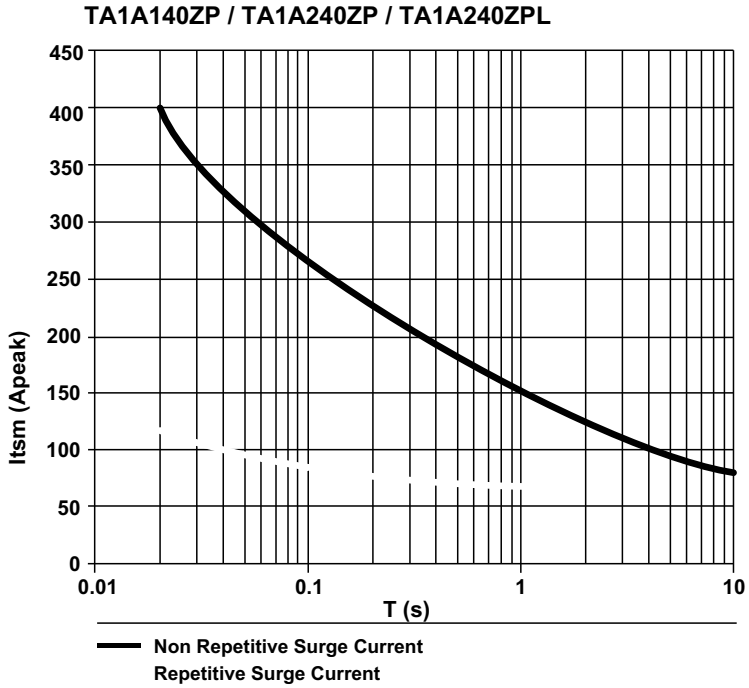

7 : Thermal Derating Curves

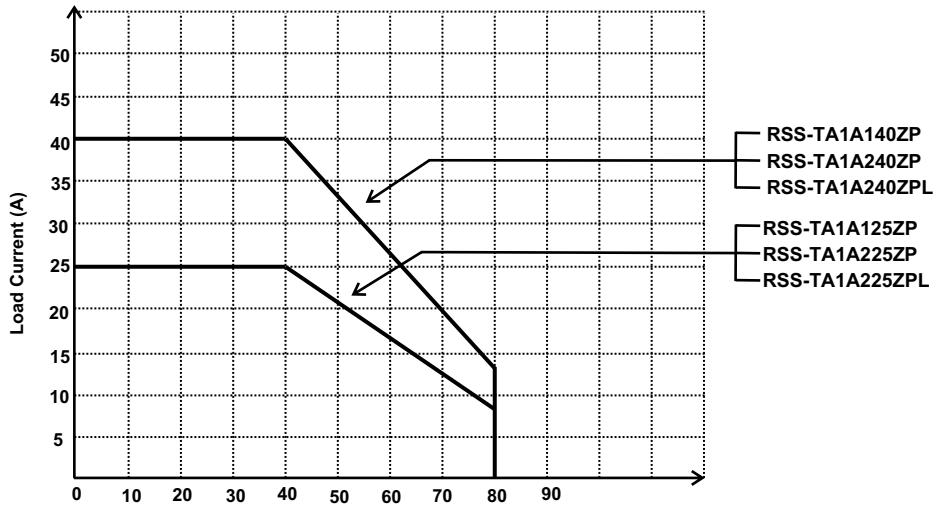

Ambient temperature [°C]
Note.: Heat sink used with a radiation efficiency of 1°C/W

8 : Wiring

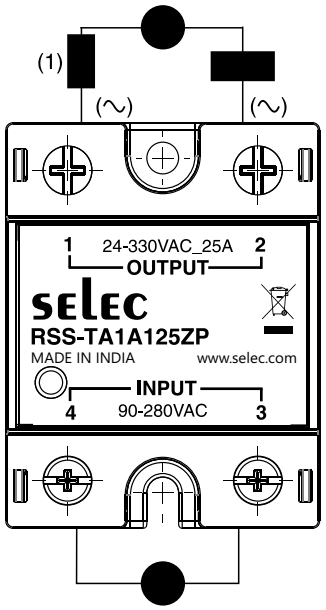

9 : Dimension (mm)

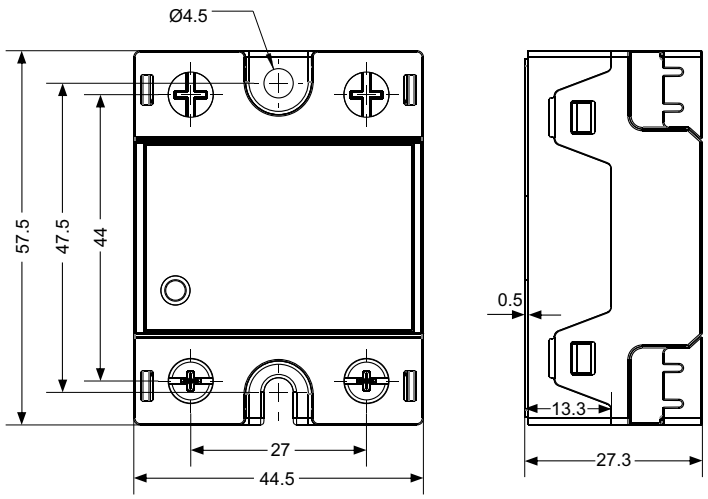

10 : Tightening Torque

M4 Screws (control input)	18..14 AWG (0.75..2.5 mm²) 2 x 18..14 AWG (0.75..2.5 mm²)	1.2 N-m
M5 Screws (load output)	16..8 AWG (1.5..10 mm²) 2 x 16..8 AWG (1.5..10 mm²)	2.0 N-m