Temperature Controller

TC203CX, TC303CX

72 x 72mm

96 x 96mm

Features :

- 3 digits, 7 segment LED single display
- TC / RTD Inputs
- ON - OFF/ PID Control
- Single set point
- °C/°F Selectable
- Field selectable control output (Relay or SSR)
- IDM Applicable

Certifications : CE

Technical specifications

Display specifications	
Display	3 Digits, 7 Segment digital display
Height of display	21mm
LED Indication	OUT: Control output ON
Input specifications	
Inputs	Thermocouple (J, K, T, R, S)/ RTD (PT100)
Resolution	Fixed 1°
Indication accuracy	For TC inputs: 0.25% of F.S. ±1° For R & S inputs: 0.5% of F.S. ±1° (30 min of warm up time) For RTD inputs: 0.1% of F.S. ±1° (F.S. = Full scale)
Temperature unit	°C/°F Selectable
Input filter (FTC)	0.2 to 10.0 sec
Sampling time	250 ms
Output specifications	
Control output (Relay or SSR user selectable)	
Relay contact (SPDT)	Main output: NO: 10A 250 VAC/ 24 VDC NO/ NC: 5A/ 5A 250 VAC/ 24 VDC
SSR Drive (Voltage pulse)	12 VDC, 50 mA
Functional specifications	
Control action	1) PID Control with auto tuning 2) ON-OFF control
Proportional band (P)	1.0 to 400°C
Integral time (I)	0.0 to 99.9 min
Derivative time (D)	0 to 999 sec
Cycle time	0.1 to 99.9 sec
Hysteresis width	0.1 to 99.9°
Manual reset value	- 19.9 to 19.9°
Auxiliary supply specifications	
Supply voltage	90 to 270 VAC/ DC (AC: 50/ 60Hz)
Power consumption	5 VA Max @ 230 VAC
Environment specifications	
Temperature	Operating: 0°C to 50°C (32 to 122°F); Storage: - 20°C to 75°C (- 4 to 167°F)
Humidity (Non - condensing)	95% RH
Mechanical specifications	
Mounting	Panel
Weight	TC203CX - 180 gms; TC303CX - 240 gms

Terminal connections

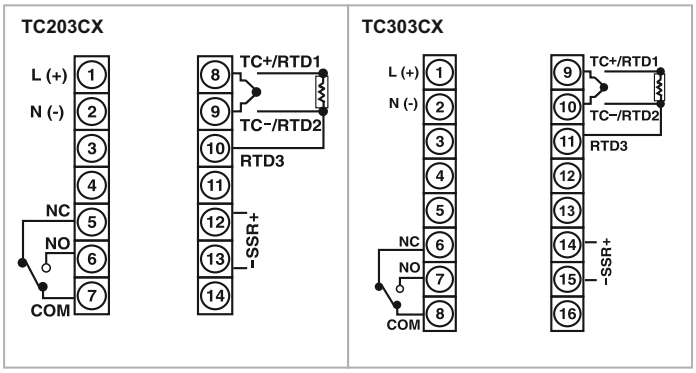

Dimensions (All are in mm)

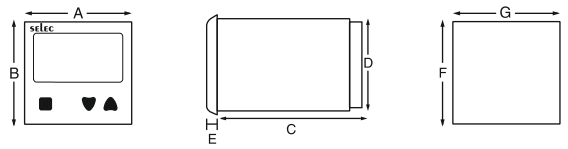

Front bezel Side view Panel cutout

MODELS / DIM	A	B	C	D	E	F	G
TC203CX	76	76	44	67	4.5	69	69
TC303CX	99	99	39	90.5	3.5	92	92

Independent downloader module (IDM)

Download device

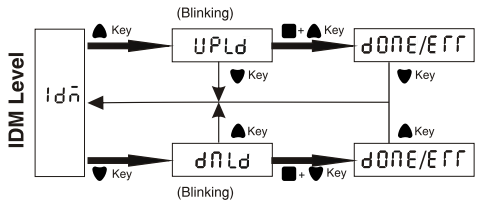

IDM Level	
Display	Parameter description
Idn	Independent downloader module
UPLd	Upload from product to IDM
dNLd	Download from IDM to product
dONE	Operation successful
ErR	Operation unsuccessful

Ordering information

Product code	Output 1		Supply voltage	Certification
	Relay	SSR		
TC203CX	RELAY (10A)	SSR (12V DC)	90 to 270V AC / DC	CE
TC303CX	RELAY (10A)	SSR (12V DC)	90 to 270V AC / DC	CE