PREFACE

Thank you for choosing the Multifunction MFM384 Series. This manual will provide you with detailed steps and precautions regarding installation, wiring, setting of functional parameters, routine maintenance, malfunction diagnosis and solution, etc.

To utilize the meter to its full potential and ensure the safety of both users and the product, please read this manual carefully before using the meter. Any incorrect operations may lead to fault, malfunction or shortened lifetime, or even damage to the device or the people around it.

This manual is available on our website and is accessible through the QR code provided on the unit. We request that you keep it safe considering its importance in commissioning, inspecting, and maintaining the product. In the pursuit of constant improvement, kindly note that all information contained in these materials, including products and product specifications represent information on the product at the time of publication and are subject to change without notice.

1. Introduction . . . . . Page No.3
2. Safety Recommendations . . . . . Page No.5
- Warning
- Safety Guidelines
- Delivery and Installation

3. Installation. . . . . Page No.6
- Installation Environment
- Installation Instructions and Space Limit

4. Feature Summary . . . . . Page No.7
5. Specification . . . . . Page No.8
- Technical Specification
- Electrical Specification
- Mechanical Specification

6. Meter Overview. . . . . Page No.11
- Front Panel View
- Back Panel View

7. Meter Panel . . . . . Page No.12
- Mounting
- Demounting
- Connection Methods
- Standard Wiring Diagram
- Description of Terminals

8. Display Overview . . . . . Page No.17
- LCD Description
- Function - LCD Symbols, LED Description

9. Key Board. . . . . Page No.19
- Key Description
- Illustration of Keyboard Operations

10. Operating Modes . . . . . Page No.21
- Measurement Mode. . . . . Page No.21
- Configuration Mode . . . . . Page No.22
  - Basic Setup
  - Communication
  - Demand
  - POP/LED
  - RTC
  - Reset
- Self Test Mode . . . . . Page No.26
- Scrolling Mode . . . . . Page No.26
- Configuration Lock/Unlock mode . . . . . Page No.26

11. Measurement . . . . . Page No.27
- Phase / System Measurement
- Demand Measurement
- Total Harmonics Distortion %
- Min/Max Values
- Energy -Mains/ DG (Import/Export)
- Real Time Clock

12. Firmware Upgrade . . . . . Page No.35

The **MFM384-C-D-CE-CL05-Plus** is a multifunction meter that offers comprehensive 3-phase electrical metering and energy monitoring.

The meter is a panel-mounted 96 x 96mm panel meter that measures important electrical parameters in 3P4W, 3P3W, 2P3W, IP2W L-L and IP2WL-N networks with field-programmable CT / PT primary and secondary values.

The meter is easy to install, easy to use, compact in size, and meets all safety and reliability standards.
The meter is normally supplied readily pre-programmed for operation and can be directly installed in the usual manner.
The user can read and write through the front panel or by using RS485 communication.

This user manual describes the basic functions and operation methods of the meter. Please read through this manual carefully before using the product.

Contents of the package

Unpack the box and check the contents before using the product. If any part or accessory is missing or if the product appears to be damaged, contact our sales representative.

List of accessories

Sr No.	Description of Accessories	Image	Qty
1	Panel mount Clamp	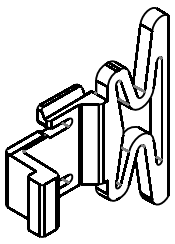	4
2	Gasket	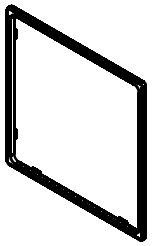	1
3	Instruction Manual	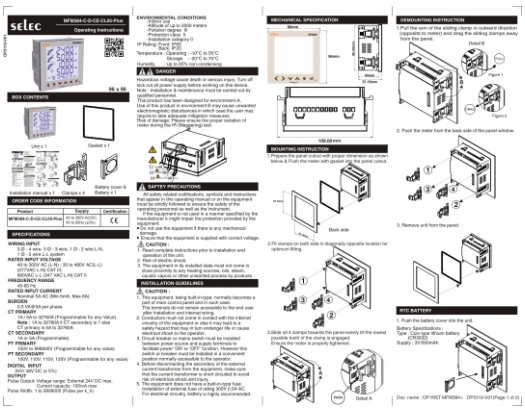	1

4	Record Test Certificate	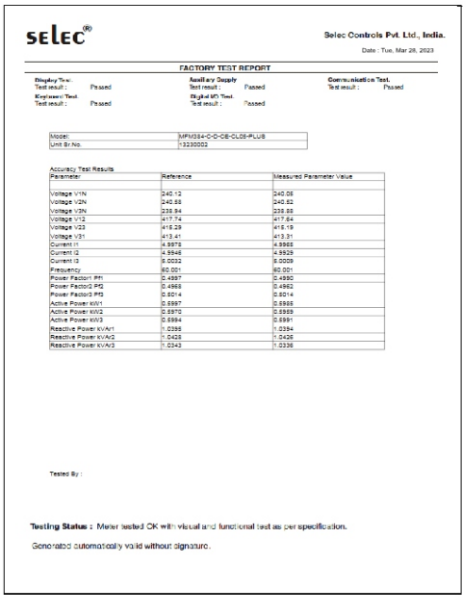	1
5	Battery Cover & Battery	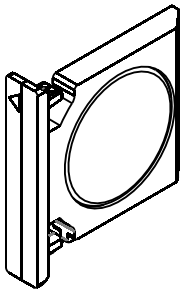	1

selec®

Selec Controls Pvt. Ltd., India.

Date : Tue, Mar 28, 2023

FACTORY TEST REPORT

Display Test.
Test result : Passed

Auxiliary Supply
Test result : Passed

Communication Test.
Test result : Passed

Keypad Test.
Test result : Passed

Digital I/P Test.
Test result : Passed

Model:	MFM384-C-O-CB-CL05-PLUS
Unit Sr.No.	13230002

Accuracy Test Results

Parameter	Reference	Measured Parameter Value
Voltage V1N	240.12	240.09
Voltage V2N	240.88	240.82
Voltage V3N	239.84	239.88
Voltage V12	417.74	417.64
Voltage V23	415.29	415.19
Voltage V31	413.41	413.31
Current I1	4.9973	4.9965
Current I2	4.9946	4.9929
Current I3	5.0032	5.0009
Frequency	50.001	50.001
Power Factor1 PF1	0.4897	0.4890
Power Factor2 PF2	0.4968	0.4962
Power Factor3 PF3	0.5014	0.5014
Active Power kW1	0.5997	0.5995
Active Power kW2	0.5970	0.5969
Active Power kW3	0.5994	0.5991
Reactive Power kVAr1	1.0395	1.0394
Reactive Power kVAr2	1.0428	1.0426
Reactive Power kVAr3	1.0343	1.0336

Tested By :

Testing Status : Meter tested OK with visual and functional test as per specification.

Generated automatically valid without signature.

SAFETY RECOMMENDATION

Read this manual carefully and follow all safety precautions before mounting, installing, operating and servicing the multifunction meter. Ignoring the safety protocols can result in damage or loss of life or property.

Warning

People working on the device should take part in professional electrical and safety training, receive the certification, and be familiar with all steps and requirements of installing, commissioning, operating and maintaining the device to avoid any hazards.

Delivery and Installation

A pre-delivery inspection for each meter is strictly implemented by our QC department. The packaging is adequately strengthened with special packing materials to protect it from justifiable harm during handling and transportation. However, as an added precaution, we request that you kindly check the following points upon receipt of the device:

- Please check for any damage caused during transportation
- Please check if the enclosed documents are inside the case, namely the record test certificate
- Please check if this is the model of the product for which you placed an order

Safety guidelines

All safety-related codifications, symbols and instructions that appear in this operating manual or on the meter must be strictly followed to ensure the safety of the operating personnel as well as the instrument. If the meter is not used in the manner specified by the manufacturer, it might impair the protection provided by the meter.

Caution

- Do not use the meter if there is any mechanical damage
- Ensure that the equipment is supplied with the correct voltage
- Read the complete instructions prior to the installation and operation of the Unit
- The equipment in its installed state must not come in close proximity to any heating sources, oils, steam, caustic vapors or other unwanted process by-products
- Power must be shut down completely before performing any kind of wiring on the auxiliary terminals
- Do not touch the internal components for your own and the product's safety
- Only qualified professional engineers are allowed to assemble, wire, commission, or maintain
- Do not conduct the procedure of inspection or maintenance until the meter has been shut down for at least 3 minutes
- No permission is granted to change or modify the internal components or circuits

Installation environment

- The surroundings must be free from dust, caustic/corrosive/inflammable gases/liquids
- There should not be any metal particulates in the surrounding air
- The ambient temperature should be -10 °C to +55 °C

Installation euidelines

- This equipment, being built-in, normally becomes part of the main control panel
- The terminals do not remain accessible to the end user after installation and internal wiring
- Conductors must not come into contact with the internal circuitry of the meter or else it may lead to a safety hazard that may in turn endanger life or cause an electrical shock to the operator
- A circuit breaker or mains switch must be installed between the power source and supply terminals to facilitate power ON or OFF functions. However, this switch or breaker must be installed in a convenient position that is normally accessible to the operator
- Before disconnecting the secondary of the external current transformer from the equipment, make sure that the current transformer is short circuited to avoid the risk of electric shock and injury
- The equipment does not have a built-in-type fuse; installation of an external fuse of rating 300V 0.5A AC

For electrical circuitry, battery is highly recommended

Salient Features

Features

- LCD display screen
- True RMS measurement
- Measurement of 3-phase energy
- Maximum and Minimum demand measurements
- Password protected programmable features
- Pages Auto scrolling and manual (fixed) mode provision
- Site programmable for CT/VT ratio
- Site programmable for Network selection
- User selectable energy measurement on POP and INT LED
- RS485 MODBUS communication
- Enclosure protection for dust and water
- Compliance with the International standard IEC 61326

Salient features

- Accuracy Class for Active Energy (Wh) Class 0.5S as per IEC62053-22 and Class 0.5 as per IEC62053-21
- Accuracy Class for Reactive Energy (VARh) Class 2 as per IEC62053-24 and IEC62053-23
- On site firmware update downloading via the boot loader functionality through RS485 communication
- Energy auto resolution for Kilo, Mega and Giga values
- Digital input for dual energy measurement - Mains and DG-Sets
- Min/Max values of instantaneous parameters (Voltage, Current, Power, Frequency and Power Factor) with time-stamping on communication
- Cybersecurity: The meter supports the disabling of the RS485 port through front panel keys to prevent unauthorised access
- Four quadrant measurements of Power factor, Power and Reactive energy
- 3 phase import, Export, Import + Export, Import-Export (Active, Reactive, Apparent) Energies
- Demand parameters with various methods (Last, Present, Predictive, Peak)
- Time-stamping for the occurrence of Peak demand, Min/Max parameter values (Voltage, Current, Power Factor, Power, Frequency) and reset of parameters
- Measurements of True, Displacement and Distortion power factor
- Programmable minimum suppression current (5mA to 99mA)
- Real-Time clock (RTC)
- THD% and individual harmonics up to the 31st harmonics for Voltage and Current
- Pulse Output (POP) - MAX 48 V DC, 100mA
- Configurable pulse weight from 1 to 9999000 (pulse/k_h)
- Voltage phase sequence detection
- Current polarity reversal detection and correction
- Load Run Hour-based on accumulated energy-Import and Export (Mains and DG both), ON Hour, Active Load Timer and Number of Auxiliary Interruptions
- Self-Test mode
- Power Factor Sign Convention (IEC/IEEE Standards) - selectable through communication
- Communication parameter values on modbus are in float and integer

Technical Specifications		
Type of measurement	Networks	3P4W, 3P3W, 1P2W L-N, 1P2W-LL
		True RMS
Measurement accuracy		Class 0.5S as per IEC62053-22
Display	LCD	Large multi-line Back light LCD 4 line 4 digit: 12.46 x 6.72mm last line of 9 digit: 6.85 x 3.73mm bar graph for % Load for each phase
Auxiliary input	Aux Voltage	40V – 300V AC/DC
	Power consumption	<6VA / 2W
	Freq range	45 - 65Hz
Measurement input	**Input Voltage**	35 - 480V AC(L-L) (277VAC LN) CAT III; 600VAC L-L (347VAC L-N) CAT II
	VT Secondary	100,110,115,120 V (Programmable)
	VT Primary	100 V to 999000 V (Programmable)
	Frequency	45 to 65Hz
	Measurement Method	True RMS
	Burden	0.5 VA
	Wire gauge	19 AWG (UL)
	Input Current	Nominal 5A AC (Min-5mA, Max-6A)
	CT Primary	1A/5A to 32760A (Programmable)
	CT secondary	1A / 5A (Programmable)
	Measurement Method	True RMS
	Burden	0.5VA
	Wire gauge	17 AWG (UL)
Digital input	DC input	24V/48V DC (± 10%)
Pulse output	Pulse Output	Voltage range : External 24V DC max Current capacity : 100mA max
	Pulse Width	1 to 9999000 (Pulse per k_h)
	Pulse duration	For POP: 50ms For LED: 25ms
	Output Type	Open collector
Communication	Type	RS485 Modbus RTU
	Baud rate	2400, 4800, 9600, 19200, 38400 bps (Programmable)
	Slave ID	1 to 247 (Programmable)
	Parity	Odd, Even, None
	Isolation	2 kV AC isolation for 1 minute between communication and other circuits
Cerification		CE, RoHS

Accuracy		
Measurement type	Class of accuracy as per IEC 61557-12 (In = 5A-nominal CT)	Permissible Error
Active energy	Class 0.5 (Class 0.5S[(1)] as per IEC 62053-22 at In = 5A nominal CT) (1). 50 mA to 6 A	±0.5%
Reactive energy	Class 2 (Class 1 as per IEC 62053-24 at In = 5A nominal CT)	±1%
Apparent energy	Class 0.5 (Class 0.5 at In = 5A nominal CT)	±0.5%
Active power	Class 0.5	±0.5%
Reactive power	Class 1	±1%
Apparent power	Class 0.5	±0.5%
Current	Class 0.5	±0.5%
Voltage (L-L)	Class 0.5	±0.5%
Voltage (L-N) Class 0.5 ±0.2%6	Class 0.5	±0.5%
Frequency	Class 0.05	±0.05%
Power factor	Class 0.5	±0.01 Count
THD and individual harmonics till 15th harmonics	Class 5	±5%
Electrical Specification		
Insulation properties	Impulse voltage test	±4kV as per IEC 61010-1
	AC Voltage test	±2kV double insulation as per IEC 61010-1
	Insulation resistance	500V DC Voltage as per IEC 61010-1
Electrical requirements	Test of power consumption	As per IEC 61010-1
	Voltage dips and Interrupts	As per IEC 61000-4-11
	Short time over current protection	20 times of I_{MAX} for half a second as per IEC 61010-1
Electromagnetic compatibility (EMC)	Electrical fast transient/burst immunity test	±2kV as per IEC 61000-4-4
	Electrostatic discharge immunity test	±8kV air discharge, ±4kV contact discharge as per IEC 61000-4-2
	Radiated, Radio-Frequency, Electromagneti field immunity test	10 V/m as per IEC 61000-4-3
	Immunity to conducted disturbances, induced by radio-frequency fields	3V as per IEC 61000-4-6
	Surge immunity test	±2kV as per IEC 61000-4-5
	Rated power frequency magnetic fields	30A/m as per IEC 61000-4-8 for continuous duration 300A/m as per IEC 61000-4-8 for short duration
	Emission	Class A as per CISPR 11
Environmental	Temperature	Operating:-10 ºC to 55 ºC Storage:- 20 ºC to 75 ºC
	Humidity	Up to 85% non-condensing
Lug Dimension	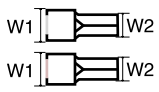	W1 = 4.2mm W2 = 1.8mm W1 = 3.8mm w2 = 1.6mm

Recommended fuse specifications	300V 0.5A AC	
Battery specifications	Coin type lithium battery (CR3032)	3V/200mAh
Mechanical Specifications		
Mounting type	Panel mount	
Size	96 x 96mm	
Front bezel	96 x 96mm	
Panel cutout	90.7 x 90.7mm	
Material	Poly carbonate - Lexan 923	
Accessories	Panel mount clamp, Gasket, Operating manual	
Weight	350 gm approx.	
Protection rating	IP rating Front : IP65 Back : IP20	
Mechanical testing	Shock	40g in 3 planes
	Vibration	10 to 55Hz,0.15mm peak amplitude
	Casing Plastic mould protected to IP65 from front	

Front Panel View:

Back Panel View:

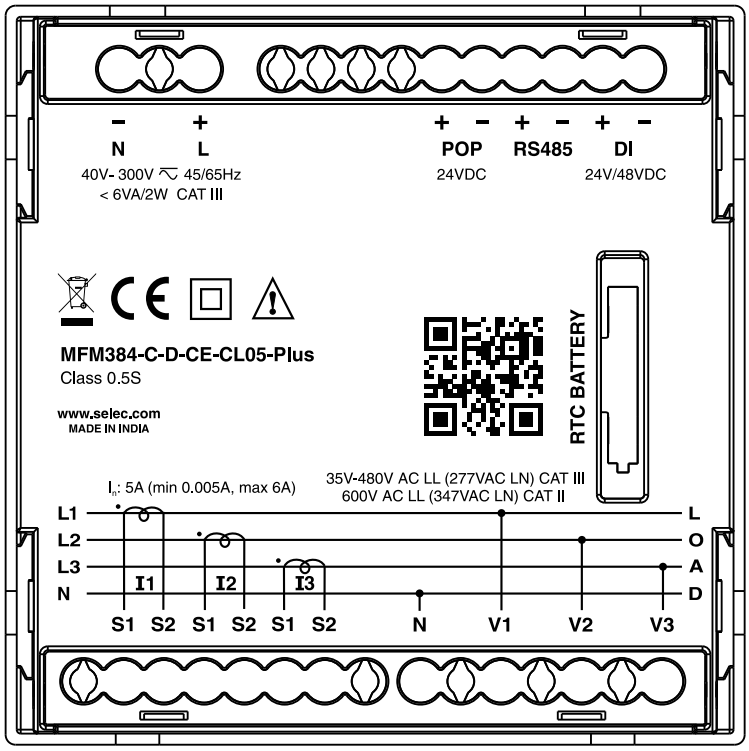

MOUNTING :

STEP	INSTRUCTION	
1	Prepare the panel cutout with proper dimensions as shown below, and push the meter with a gasket into the panel cutout	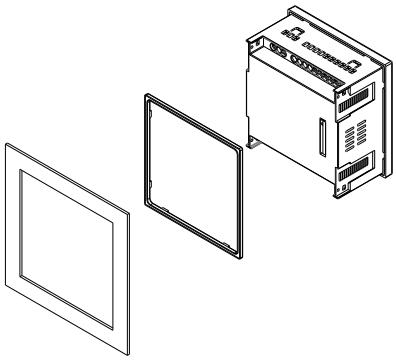
2	Fit clamps on both side in diagonally opposite location for optimum fitting	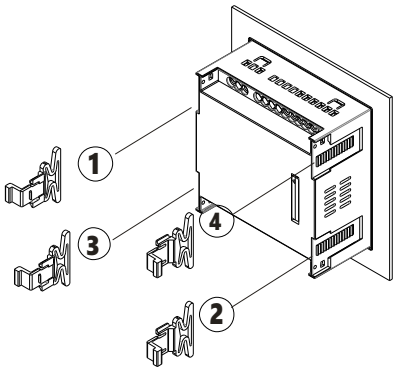
3	Slide all four clamps evenly towards the panel until the lowest possible tooth of the clamp is engaged. Ensure the meter is properly tightened	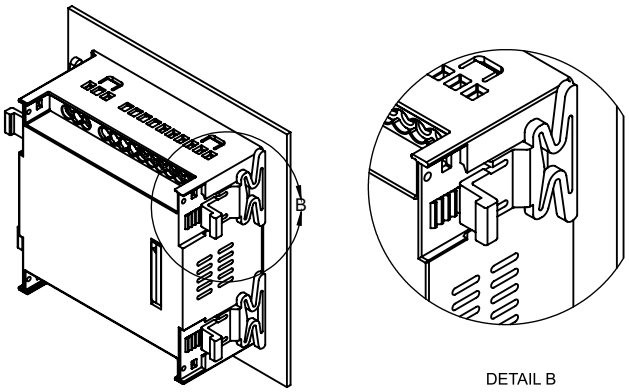
4	Push the battery holder into the unit	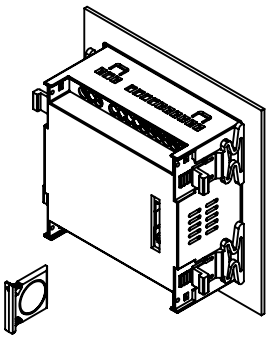

Demounting:

STEP	INSTRUCTION	
1	Pull the arm of the sliding clamp in an outward direction (opposite to meter) and drag the sliding clamps away from the panel	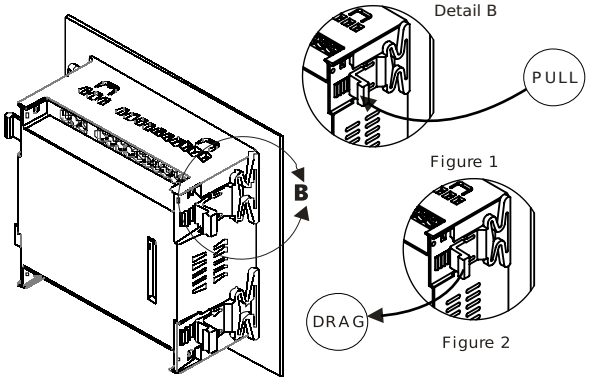
2	Push the meter from the back side of the panel window	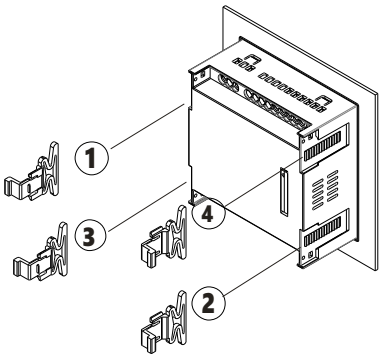
3	Remove the unit from the panel	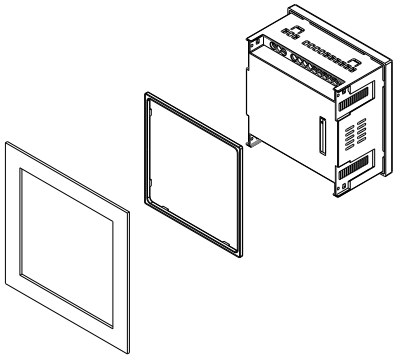

Wiring diagram:

1 PHASE 2 WIRE (L-N)	1 PHASE 2 WIRE (L-L)
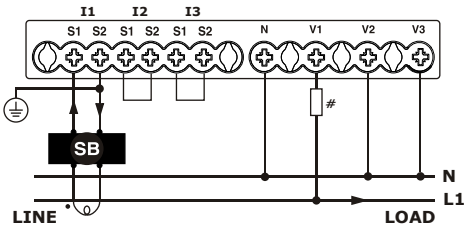 1CT (L-N)	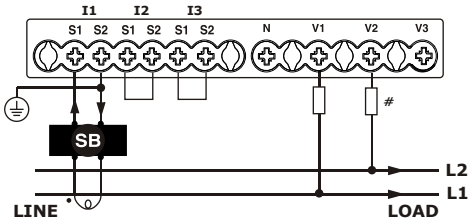 1CT (L-L)
3 PHASE 3 WIRE	
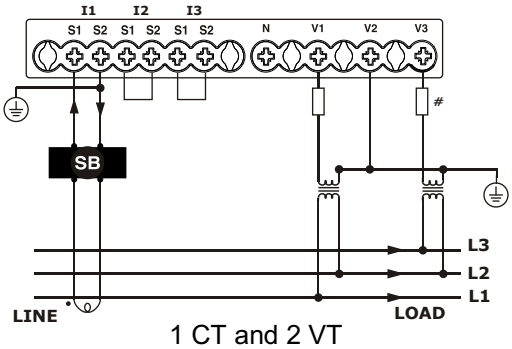 1 CT and 2 VT	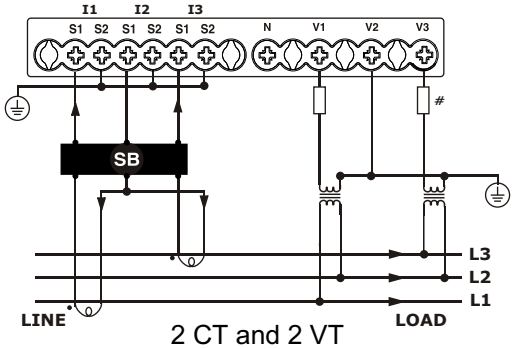 2 CT and 2 VT
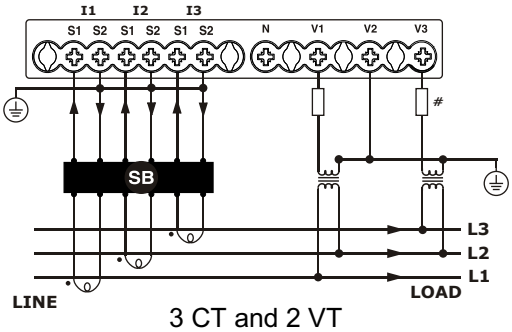 3 CT and 2 VT	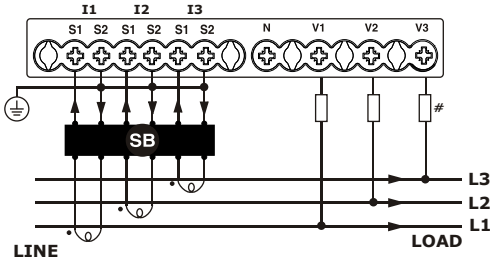 3 CT
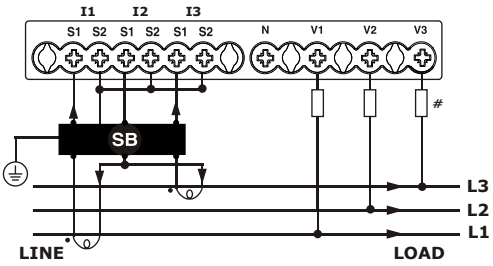 2 CT	

3 PHASE 4 WIRE

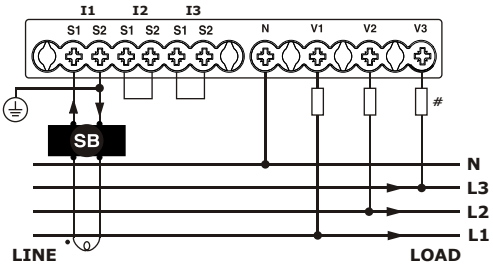

1 CT

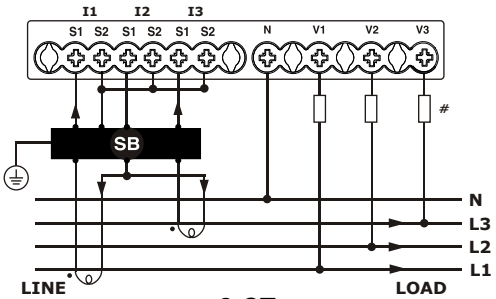

2 CT

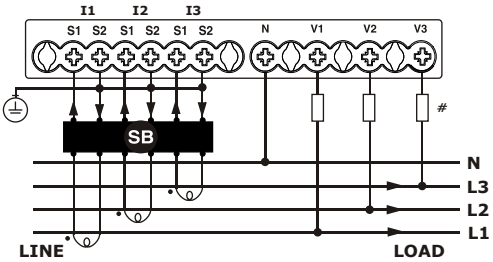

3 CT

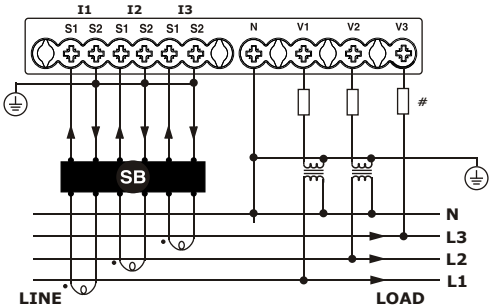

3 CT and 2 VT

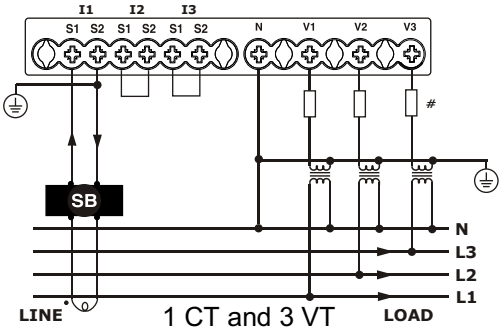

1 CT and 3 VT

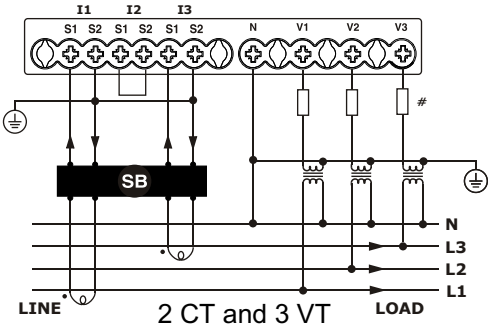

2 CT and 3 VT

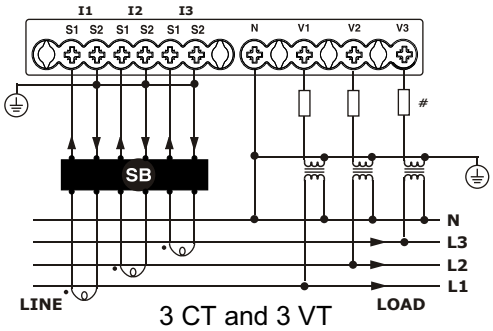

3 CT and 3 VT

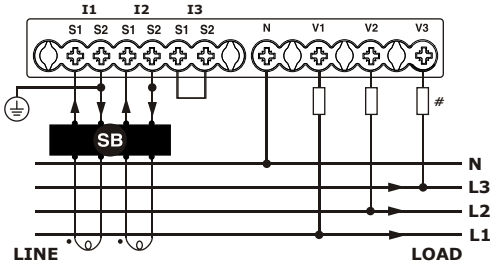

2 CT and 2 VT

Description of terminals:

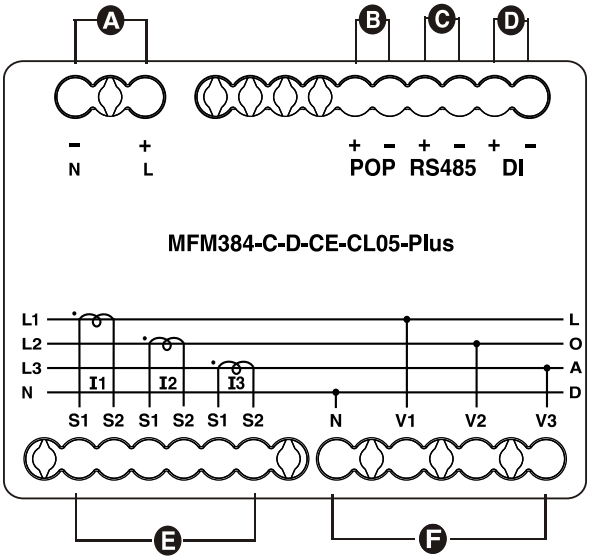

A	L (Line)	Auxiliary input
	N (Neutral)	
B	POP+	Pulse output
	POP-	
C	RS485+	Communication connection
	RS485-	
D	DI+	Digital input
	DI-	
E	S1(I1)	3 Phase current input
	S2(I1)	
	S1(I2)	
	S2(I2)	
	S1(I3)	
	S2(I3)	
F	N (Neutral for voltage input)	Three phase voltage input
	VR (Voltage R-Phase)	
	VY (Voltage Y-Phase)	
	VB (Voltage B-Phase)	

Direct connect voltage limits

You can connect the meter's voltage inputs directly to the phase voltage lines of the power system if the power system's line-to-line or line-to-neutral voltages do not exceed the meter's direct connect maximum voltage limits.

The meter's voltage measurement inputs are rated by the manufacturer for upto 277VL-N/480VL-L. However, the maximum voltage allowed for direct connection may be lower, depending on the local electrical codes and regulations.

As per installation category II/III the maximum voltage on the meter voltage measurement inputs should not exceed 277V L-N / 480V L-L for CAT III and 347V L-N / 600V L-L for CATII.

If your system voltage is greater than the specified direct connect maximum voltage, you must use Vts (voltage transformers) to step down the voltages.

Power system description	Meter configuration	Symbol	Direct connect maximum (IEC)		No. of VTs (if required)
			Installation category III	Installation category II	
Single - phase 2 wire line - to neutral	1P2W L-N	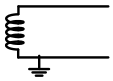	≤ 277V L-N	≤ 347V L-N	1 VT
Single - phase 2-wire line-to-line	1P2W L-L	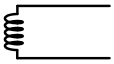	480V L-L	600V L-L	1 VT
3 - phase3 - wire Delta ungrounded	3P3W	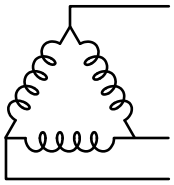	480V L-L	600V L-L	2 VT
3 - phase 3 - wire Delta corner grounded		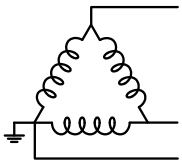	240V L-L	600V L-L	2 VT
3 - phase 3 - wire Wye ungrounded		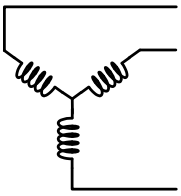	480V L-L	600V L-L	2 VT
3 - phase 3 - wire Wye grounded		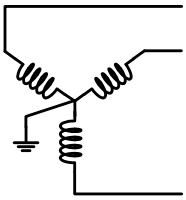	480V L-L	600V L-L	2 VT
3 - phase 3 - wire Wye resistance grounded		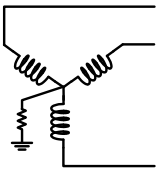	277V L-N / 480V L-L	347V L-N / 600V L-L	2 VT

3 - phase 4 - wire open delta center - tapped	3P4W	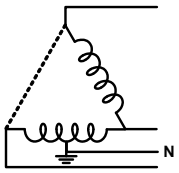	173V L-N / 347V L-L	347V L-N / 600V L-L	3 VT
3 - phase 4 - wire delta center tapped		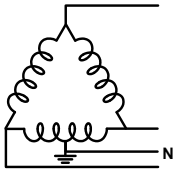	173V L-N / 347V L-L	347V L-N / 600V L-L	3 VT
3 - phase 4 - wire ungrounded Wye		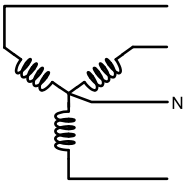	≤ 277V L-N / 480V L-L	≤ 347V L-N / 600V L-L	3 VT or 2VT
3 - phase 4 - wire grounded Wye		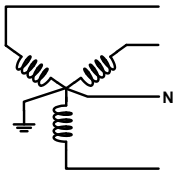	≤ 277V L-N / 480V L-L	≤ 347V L-N / 600V L-L	3 VT or 2 VT
3 - phase 4 - wire resistance grounded Wye		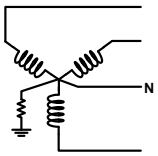	≤ 277V L-N / 480V L-L	≤ 347V L-N / 600V L-L	3 VT or 2 VT

LCD description

The front of the meter consists of LCD screen and six control keys. All the display segments are illustrated as below. Function LCD symbols, LED description:

All display segments

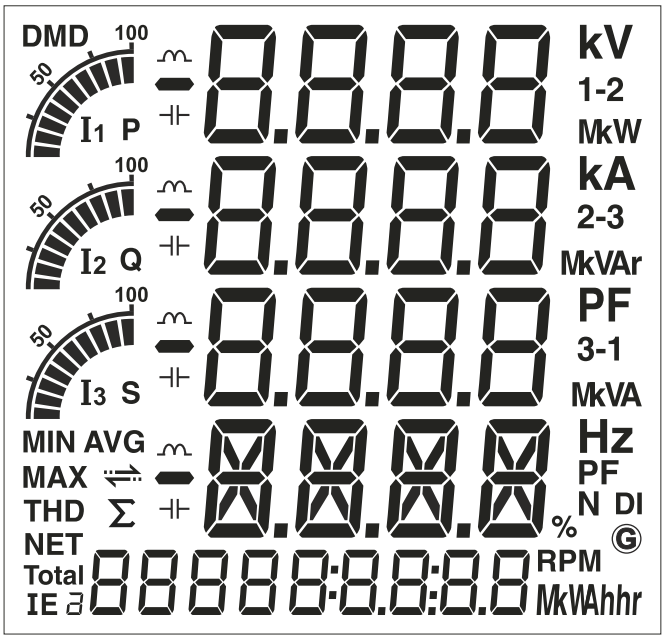

Sr. No.		
1	Four Lines of 4 digit	The numeric real time metering data will be displayed here
2	Single line of 9 digit	Display energy data and real time clock (Time)
3	KV, kA, PF, Hz, kW, kVAr, kVA, kWh, kVArh, kVAh	Symbols represents for units representation of parameter values Voltage: V, KV Current: A, KA Active power: kW, MW Reactive power: KVAr, MVAr Apparent power: KVA, MVA Frequency: Hz Active energy: kWh, MWh, kMWh) Reactive energy: KVArh, MVArh, KMVAh(1) Apparent energy: KVAh, MVAh, KMVAh(1) **(1)For Giga-k and M both symbols will be ON**
4	1-2, 2-3, 3-1, AVG, N	1, 2, 3: Represents 3 phases 1-2, 2-3, 3-1: Represents 3 phase VLL AVG Represents the average N: stands for neutral
5	THD, MIN, MAX, DMD, RPM, G	THD for Total harmonics distortion; MAX for maximum and MIN for minimum; DMD for Demand RPM- Revolution per minute G - Secondary Source (Gen set)

6	NET,Total, I, E	I: Import Energy Total: Algebraic sum of power Net: Absolute sum of Import and Export energy E: Export Energy
7		Communication symbol
8		Load type symbol Inductive and Capacitive
9	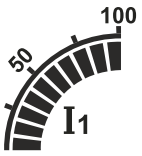	Bar graph represents percentage load to the rated current for each phase
10	RED LED	Energy pulsing LED

Keyboard description

There are 6 dedicated keys to read the meter parameters. Simply press these keys to read the parameters.
Illustrations of keyboard operations with different modes

Key function to access measurement mode parameters

Measurement mode		Phase measurement
		System measurement
		Demand measurement
		Min / Max measurement
		Real time clock
		Energy measurement

Key function to access different features of meter

Mode	Key press	Key description
Measurement mode		Press and hold key for 3 seconds to check the Phase voltage sequence detection
		Press and hold key for 3 seconds to check the CT polarity reversal detection
	PRG	Press and hold key for 3 seconds to enter or exit from the configuration mode
		Press and hold key for 3 seconds to enter or exit from the self test mode
		Press and hold key for 3 seconds to Toggle between Automatic and Manual(fixed) mode
	+	Press and hold key for 3 seconds to Lock and Unlock the configuration mode

Key Function to access Configuration mode parameters

Mode	Key Press	Key Description
Configuration mode		To move cursor left by one digit each time
		To move cursor right by one digit each time
		To decrement the parameter value
		To increment the parameter value
		To go back to previous page
		To save the setting and move on to next page

These meter is come with different types of mode to see the Meter features and their functionality. For ease of meter operation, the Operating modes are classified as below

- Measurement mode
- Configuration mode
  - Basic setup
  - Communication
  - Demand
  - POP/LED
  - RTC
  - Reset
- Self test mode
- Scrolling mode
- Configuration Lock / Unlock mode

Measurement mode:

Measurement mode is the default mode when you power up the Meter. In Measurement mode, the types of measurement have been classified into six specified parameters measurement as mentioned in the table below.

Key Press		Online Page Description
	Phase measurements	• Line to Neutral voltage of 3 phase and Average Line to Neutral voltage • Line to Line voltage of 3 phase and Average Line to Line voltage • Phase Current of 3 phase and average current • Power factor of 3 phase and average power factor • Phase angle 3 of phase • Active power, Reactive and Apparent power of 3 phase • Total active, Reactive and Apparent power • Voltage LN THD% of 3 phase and Average VLN THD% • Voltage LL THD% of 3 phase and Average VLL THD% • Current THD% of 3 phase and Average Current THD%
	System measurements	• Average Line to Neutral voltage • Average current • Average power factor • Frequency • 1st phase Voltage, Current, Power factor and Frequency • 2nd phase Voltage, Current, Power factor and Frequency • 3rd phase Voltage, Current, Power factor and Frequency • % Unbalance current • Neutral current • Total Active, Reactive and Apparent power
	Demand measurements	• Peak Max/Min demand of total active, Reactive and Apparent power and Average current • Present Max/Min demand of total Active, Reactive and Apparent power and Average Current • Last MAX/MIN demand of Total Active, Reactive and Apparent power and Average current • Predicted Max/Min demand of total Active, Reactive and Apparent power and Average current
	Min / Max measurements	• Max and Min Average line to neutral voltage • Max and Min Average current • Max and Min Frequency • Max and Min Average line to line voltage • Max and Min total Active, Reactive and Apparent power

	RTC	• Year • Month • Date • HH:MM:SS
	Energy measurement	• Import and Export Active energy of 3 phase • Total Import and Total export active energy • Total Net (Import + Export) Active energy • Import and Export reactive energy of 3 phase • Total Import and Total export reactive energy • Total Net (Import + Export) Reactive energy • Import and Export apparent energy of 3 phase • Total Import and Total export apparent energy • Total Net (Import + Export) Apparent energy • RPM

Configuration mode:

The Configuration mode allow the user to configure the functions. The functions are explained in the table below.

Note: The settings should be done by a professional, after going through this users manual and after having understood the application situation.

Time out for Configuration mode is 1minute. After time out, meter exits configuration mode and goes to measurement mode.

- Basic setup
- Communication
- Demand
- POP/LED
- RTC
- Reset

Sr No.						
1	Basic setup	CONG PASS WORD	Configuration password	0000 to 9997	1000	
2		CHNG PASS WORD	Change password	NO/YES	NO	
3		NEW PASS WORD	New password	0000 to 9997	0	**NOTE:** The New password is enabled only if Change Password is YES
4		NET WORK SELN	Network selection	3P4W 3P3W 1P2W L-N 1P2W L-L	3P4W	
5		CT TERM SELN	CT Terminal selection	CT1 CT2 CT3 CT12 CT23 CT31	CT123	**NOTE:** The CT terminal selection is anabled based on the selected network and VT connect configuration
6		CT PRIM	CT Primary	1 OR 5 to 32760	5	
7		CT SEC	CT Secondary	1 OR 5	5	
8		VT SELN	VT Selection	NO VT 1 VT 2 VT 3 VT	NO VT	**NOTE:** The VT Selection is enabled based on selected network

9	Basic setup	VT PRIM SELN	VT Primary selection	100 to 999000	100	**NOTE:** VT Primary Selection will not be enabled if VT Selection is NO VT
10		VT SEC SELN	VT Secondary selection	100 110 115 120	100	**NOTE:** VT Secondary will not be enabled if VT Connect is NO VT.
11		SYS FREQ SELN	System Frequency selection	50/60 HZ	50 HZ	
12		MIN SUPP CURR	Minimum suppression current	5 to 99 mA	11 mA	
13		CT SEQU ENCE	CT Sequence	CT123 CT321 CT312 CT231 CT213 CT132	CT123	**NOTE:** The CT Sequence is applicable for 3P3W and 3P4W configurations and CT123 CT Terminal value. If you change the network or CT Terminal value, then the CT sequence resets to the default value.
14		CT POLA RITY	CT Polarity	NONE CT1 CT2 CT3 CT12 CT23 CT31 CT123	NONE	**NOTE:** The CT Polarity parameters are enabled based on selected network and CT Terminal value. If you change the network or CT Terminal value, then the CT Polarity Correction resets to the default value.
15	Commun ication	COMM PASS WORD	Communication password	0001 to 9998	1001	
16		COMM	Communication	ON/OFF	ON	
17		SLVE ID SELN	Salve ID selection	1 to 247	1	
18		BAUDE RATE SELN	Baud rate selection	2400/4800/ 9600/19200/ 38400	9600	
19		PARI TY SELN	Parity selection	NONE/ODD/ EVEN	NONE	
20		STOP BIT SELN	Stop bit selection	1 OR 2	1	
21		ENDI AN NESS	Endianess	MSRF/LSRF	MSRF	**Note:** This parameter will help you see values in LSRF (Mid-Little Endian) or MSRF (Big Endian) sequence of bytes of word.
22		BKLT OFF TIMR	Backlight OFF timer	0 to 7200	0	
23	Demand	PWR DMD METD	Power demand	SLIDING/FIXED/ FIXED-SLIDING /THERMAL	SLIDING	

24		PWR DMD DURN	Power demand duration	1 to 60 MINUTES	15	
25		PWR DMD LNGT	Power demand length	1 to 60 MINUTES	1	
26		CURR DMD METD	Current demand method	SLIDING/FIXED/ FIXED-SLIDING/ THER-MAL	SLIDING	
27		CURR DMD DURN	Current demand duration	1 to 60 MINUTES	15	
28		CURR DMD LNGT	Current demand length	1 to 60 MINUTES	1	
29		DMD SYNC TYPE	Demand sync type	NONE/ COMMAND/ CLOCK-SYNC	NONE	
30		DMD CL.SY TIME	Demand clock sync time	00:00:00 to 23:59:59 00 – 23 00 – 59 00 – 59	12:00:00 AM	**NOTE:** The clock sync is available only for clock sync type under power and current demand.
31		LED OUT PUT	LED output	ON/OFF	ON	
32	POP/ LED	LED ENRG PARA	LED energy parameter	IMPORT kWh EXPORT kWh TOTAL kWh IMPORT kVARh EXPORT kVARh TOTAL kVARh IMPORT kVAh EXPORT kVAh TOTAL kVAh NONE	IMPORT-kWh	**NOTE:** These parameters cannot be viewed if LED OUTPUT is OFF.
33		LED PULS WIDT	LED pulse width	1 to 9999000	1	
34		POP OUT PUT	POP output	ON/OFF	OFF	
35		POP ENRG PARA	POP energy parameter	IMPORT kWh EXPORT kWh TOTAL kWh IMPORT kVARh EXPORT kVARh TOTAL kVARh IMPORT kVAh EXPORT kVAh TOTAL kVAh NONE	IMPORT-kWh	**NOTE:** These parameters cannot be viewed if PULSE OUTPUT is OFF.
36		POP PULS WIDT	POP pulse width	1 to 9999000	1	
37		NO.OF POLE SELN	Number of pole selection	02 to 98	2	
38	RTC	SET RTC PARA	Set RTC parameter	NO/YES	NO	

39	RTC	SET RTC	Set RTC date	01:01:22 to 31:12:91	00:00:00	**NOTE:** RTC can not be set if
40		SET RTC TIME	Set RTC time	00:00:00 to 23:59:59	00:00:00	SET RTC Time is OFF.
41	Reset	FACT DEFT	Factory default	NO/YES	NO	
42		RSET ENRG	Reset energy	NO/YES	NO	
43		RSET PASS WORD	Reset password	0002 to 9999	1002	
44		RSET ACT ENRG	Reset active energy	NONE/MAINS/ DG/BOTH	NONE	
45		RSET RACT ENRG	Reset reactive energy	NONE/MAINS/ DG/BOTH	NONE	
46		RSET APPR ENRG	Reset apperant energy	NONE/MAINS/ DG/BOTH	NONE	
47		RSET MAX DMD	Reset max demand	NO/YES	NO	
48		RSET RUN HOUR	Reset Run Hour	NO/YES	NO	
49		RSET ON HOUR	Reset ON Hour	NO/YES	NO	
50		RSET AUX INT	Reset auxiliary interrupt	NO/YES	NO	
51		MIN MAX RSET	Reset Min-Max parameter	NO/YES	NO	

Note: The Configuration mode is always password protected.

Configuration mode password		
For setting the Configuration mode parameters user will be prompted for the password. If correct password is entered, user will be able to access the all programming parameters.		
Description	**Range**	
Configuration mode	0000-9997	Default : 1000
Communication	0001-9998	This password will be greater than the configuration password by 1 i.e. (1001)
Reset	0002-9999	This password will be greater than the configuration password by 2 i.e. (1002)

Self test mode:

The meter offers in built Self-test mode feature to identify the meter's measurement failure and communication failure error with Meter's system information given in table below.

1	All segment and LED ON	On entering Self-Test mode, all LCD segments will be ON
2	Serial number	Displays the meter serial number, for example 50220001
3	Hardware version	Displays the meter hardware version number
4	Software version	Display the meter software version number
5	Boot loader version	Display the meter boot loader version number
6	System error code	Displays the error codes of the meter for diagnostics. The following are the system error codes 1 – Ram Failure 4 – RTC Failure 8 – Calibration Failure If there is more than one error, code will be shown as sum of the each error code.(Eg.,18, 14, 48)
7	ON Hour	Indicates the period for which the power meter's auxiliary supply is ON, regardless of the voltage and current inputs
8	Import Run hours- Mains	Indicates the period the load has been delivered. This counter accumulates as long as the load is ON
9	Export Run hours- Mains	Indicates the period the load has been received. This counter accumulates as long as the load is ON
10	Import Run hours- DG	Indicates the period the load has been delivered. This counter accumulates as long as the generator load is ON
11	Export Run hours- DG	Indicates the period the load has been received. This counter accumulates as long as the generator load is ON.
12	Active load timer	Active load timer show how much time a load has been running, based on accumulated energy - Import and Export.
13	Auxiliary interruption	Number of supply outages, means the number of auxiliary supply interruptions. if the voltage signals die out from time to time.
14	Communication Parameters: Slave ID Baud rate Parity Stop bit	Displays the unit ID, baud rate, and parity values of the meter Displays the communication errors of the meter. The following are the communication error codes. 0 – No error 1 – Slave Id error 2 – Baud rate error 3 – Parity error 4 – Framing error 5 – Overrun error 6 – Receive error

Scrolling mode

The user can set the display screen in auto scrolling mode or manual (fixed) screen mode via the front panel keys

Long press ⏎ for 3 seconds to toggle between manual and automatic mode

• **Automatic mode:** In automatic mode, online pages scroll automatically at the rate of 5 seconds per page. In Automatic mode when any key is pressed, unit temporarily switches to manual mode and the appropriate page is displayed. Also if any key is not pressed for 5 sec, unit resumes automatic mode. RTC page will not be visible while scrolling, but can be viewed if key is pressed

• **Manual mode (fixed):** In manual mode, selected online page will remains static

Configuration Lock / Unlock mode:

The meter provide Lock / Unlock mode to enables/disables user to enter in configuration mode while meter is in measurement mode.

Long press « + ⏎ for 3 seconds to Lock/Unlock configuration mode entry

Display Measured Parameter

Real time measuring	VL-N phase voltage per phase and 3 phase average	V1,V2,V3,VLN_{AVG}
	VL-L line voltage per phase and 3 phase average	V12,V23,V31, VLL_{AVG}
	Current - Per phase and 3 phase average	I1,I2,I3,I_{AVG}
	Calculated neutral current	In
	Unbalanced voltage *	V1,V2,V3,V12,V23,V31,$VL\text{-}N_{AVG}$ $VL\text{-}L_{AVG,}$ $VL\text{-}N_{WORST,}$ $VL\text{-}L_{WORST}$
	Unbalanced current *	I1,I2,I3,I_{AVG},I_{WORST}
	Active power	kW1, kW2, kW3, kW_{TOTAL}
	Reactive power	kVAR1, kVAR2, kVAR3, $kVAR_{TOTAL}$
	Apparent power	kVA1, kVA2, kVA3, kVA_{TOTAL}
	Phase angle	PA1,PA2,PA3
	True power factor - Per phase and 3 phase average	PF1,PF2,PF3,PF_{AVG}
	Displacement power factor - Per phase and 3 phase average*	PF1,PF2,PF3,PF_{AVG}
	Distortion power factor - Per phase and 3 phase average*	PF1,PF2,PF3,PF_{AVG}
	Frequency	Hz
	THD VL-N %	V1,V2,V3,VLN_{AVG}
	THD VL-L %	V12,V23,V31, VLL_{AVG}
	THD current %	I1,I2,I3,I_{AVG}
Min and Max values with time stamping*	Average voltage L-N	$VLN_{MIN,}$ VLN_{MAX}
	Average voltage L-L	$VLL_{MIN,}$ VLL_{MAX}
	Current	$I_{MIN,}$ I_{MAX}
	Neutral current *	In MIN In MAX
	PF*	$PF1_{MIN,}$ $PF1_{MAX}$ $PF2_{MIN,}$ $PF2_{MAX}$ $PF3_{MIN,}$ $PF3_{MAX}$
	Total power	$KW_{MIN,}$ kW_{MAX} $kVA_{MIN,}$ kVA_{MAX} $kVAR_{MIN,}$ $kVAR_{MAX}$
	Frequency	$Hz_{MIN,}$ Hz_{MAX}
Demand	Power demand (kW, kVAR, kVA)	Last demand Present demand Predictive demand Peak demand *
	Current demand (I)	Last demand Present demand Predictive demand Peak demand *
Energy (mains)	Active energy Apparent energy Reactive energy (4 quadrant based VARh*)	Accumulated energy Import - Per phase and Total Export - Per phase and Total Total NET (Import + Export) Total NET (Import - Export)*
		Last cleared energy* Import - Per phase and Total Export - Per phase and Total

		Total NET (Import + Export) Total NET (Import - Export)
Energy (DG)	Active energy Apparent energy Reactive energy	Accumulated Energy Import - Per phase and Total Export - Per phase and Total Total NET (Import + Export) Total NET (Import - Export)*
		Last cleared energy* Import - Per phase and Total Export - Per phase and Total Total NET (Import + Export) Total NET (Import - Export)
RTC	Date and Time	DD:MM:YY HH:MM:SS
RPM	Revolution per minute	RPM
Meter ON hour		
Run hours	Run hours - Import /Export - Mains	Import Run hours- Mains
		Export Run hours- Mains
	Run hours - Import /Export - DG	Import Run hours- DG
		Export Run hours- DG
Active load timer		
Auxiliary interrupts		

All features can be accessed via Communication or from the meter front, however* indicating features that can only be accessed via communication.

Phase and System measurement:

The meter measures true RMS values of all 3 phases and Neutral. Meter measure AC voltage and AC current inputs continuously at a sampling rate of 64 samples per cycle.

All real time value data can be accessed via communication or from the meter front.

Total harmonics distortion %:

Meter can measure and analyze several power quality parameters which is useful for further analyzing the voltage and current signals measured by the meter

Total Harmonic Distortion: A ratio of the sum of powers in all harmonic components to power of the fundamental frequency. Meter also supports even and odd order THD, where even order harmonics are the 2nd, 4th, 6th, and so on and odd order harmonics are 3rd, 5th, 7th, etc. %THD of Voltage and Current per phase and average value data can be accessed via communication or from the meter front,however individual harmonics can only be accessed via communication.

Min/Max values:

The meter logs maximum and minimum value for real time as well as the time when they occurred. All data is stored in non-volatile memory so that statistic information can be preserved even when the meter is loses power or gets shut off. All maximum and minimum data of VLN, VLL, Current, Total Power and Frequency can be accessed via communication or from the meter front, however only Power Factor's Min/Max value can only be accessed via communication.

Power factor Min/Max convention:

In order to determine the minimum and maximum Power Factor values, the meter uses a specific Power Factor convention method. All maximum and minimum Power Factor data can only be accessed via communication.

For Communication, The Power Factor are displayed in the form of PF registers value as below.

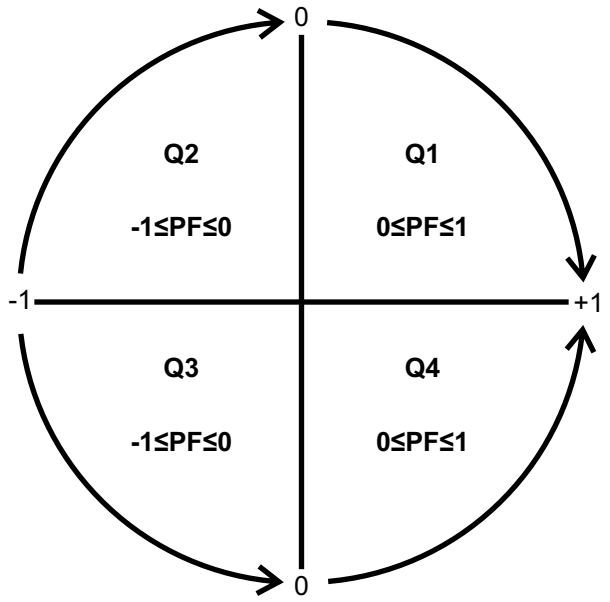

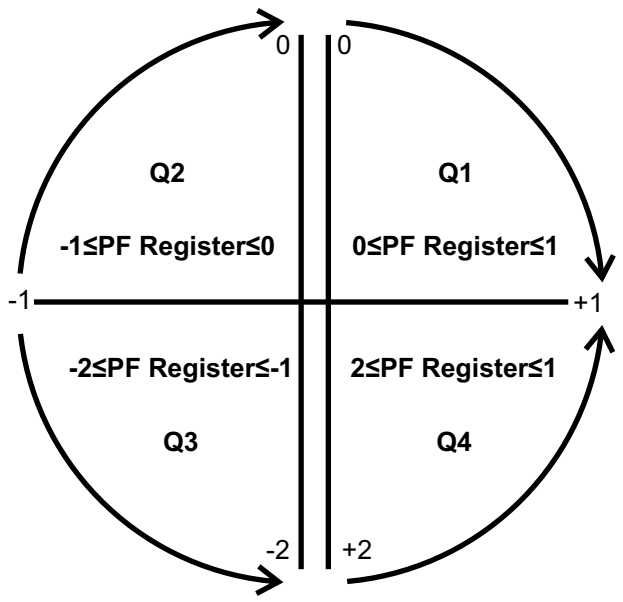

The Power Factor value is calculated from the PF register value using the following formula:

Quadrant 1	0 to +1	0 to +1	PF Value = PF register value
Quadrant 2	-1 to 0	-2 to -1	PF Value = (-2) - PF register value
Quadrant 3	0 to -1	-1 to 0	PF Value = PF register value
Quadrant 4	+1 to 0	+1 to +2	PF Value = (+2) - PF register value

Negative power factor reading	PF readings between -0 to -1.	Closest to -0	Closest to -1.
Positive power factor reading	PF readings between +1 to +0	Closest to +1.	Closest to +0

Demand measurement:

The meter can support demand measurements consisting of power and current demand readings.

The demand will be calculated using the demand calculation method configured in the meter.

There are four standard types of demand calculation methods, that Meter supports: Fixed, Sliding Fixed-Sliding, Thermal method.

The meter provides last, present, predicted, and peak demand values and a time stamp when the peak demand occurred.

- **Power demand (Total W, VAR, VA)**
- **Current demand (Average Amps)**

All demands value data can be accessed and reset via communication or from the meter front, however only peak demand reset time-stamps information can only be accessed via communication.

1. Sliding demand:

Present and peak demand updates at the end of each sub-interval. Last demand lags one sub-interval. If demand duration selected is 3 and demand length selected is 2, then demand is updated at the end of 2 minutes. Here, interval is of 6 minutes and update time is 2 minutes.

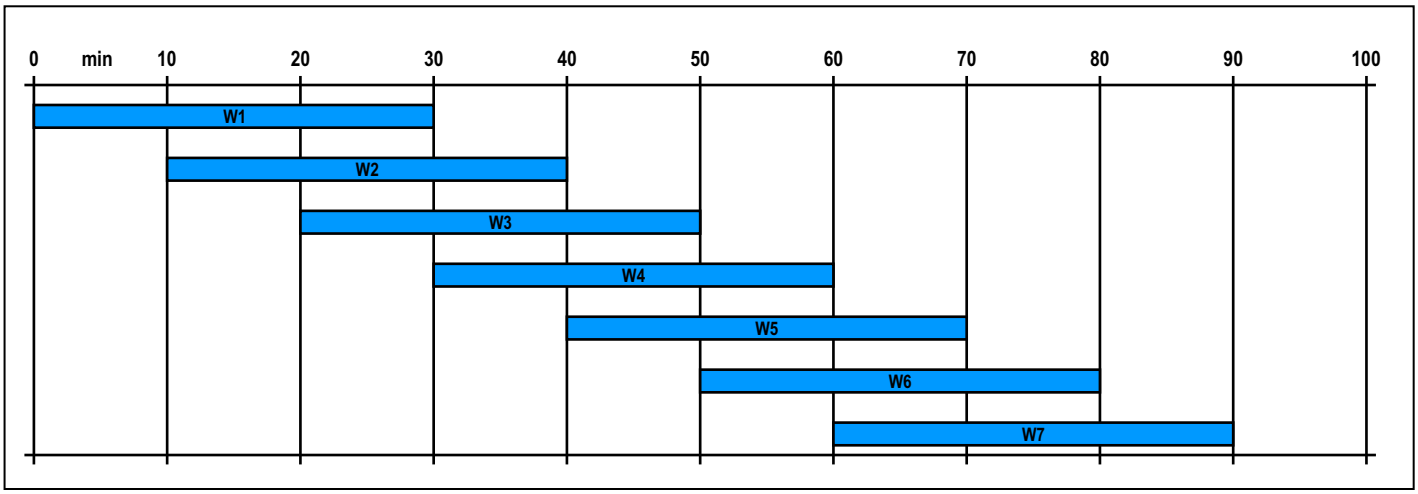

2. Fixed Demand :

Present demand updates at the end of every 1 minute (fixed) and the peak and last demand values are updated at the end of interval.

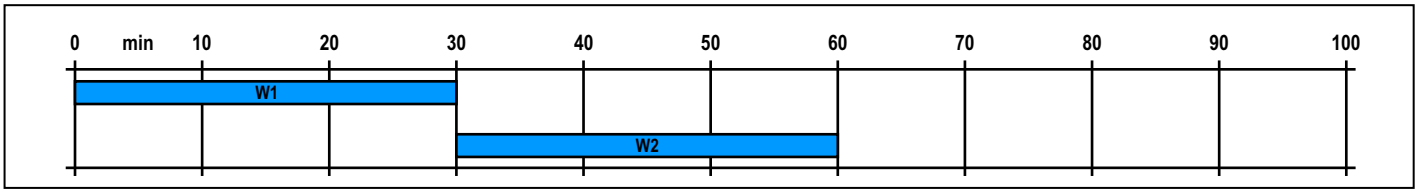

3. Fixed-Sliding demand:

Present and peak demand updates every 15 seconds (if demand duration is between 1 and 15 minutes) or 60 seconds (if demand duration is between 16 and 60 minutes) and last demand is updated at the end of interval.

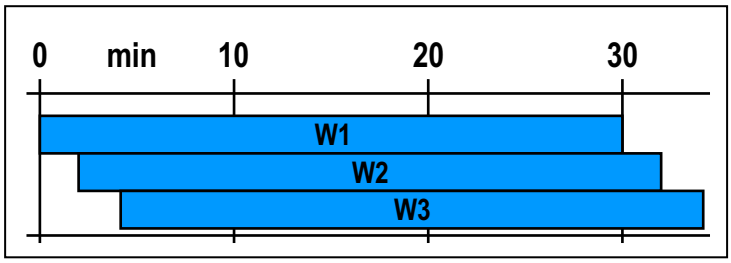

4. Thermal demand:

A Thermal response is the one which is used to calculate thermal demand. By setting the DMD Duration (1 to 60min) the thermal response curve can be derived.

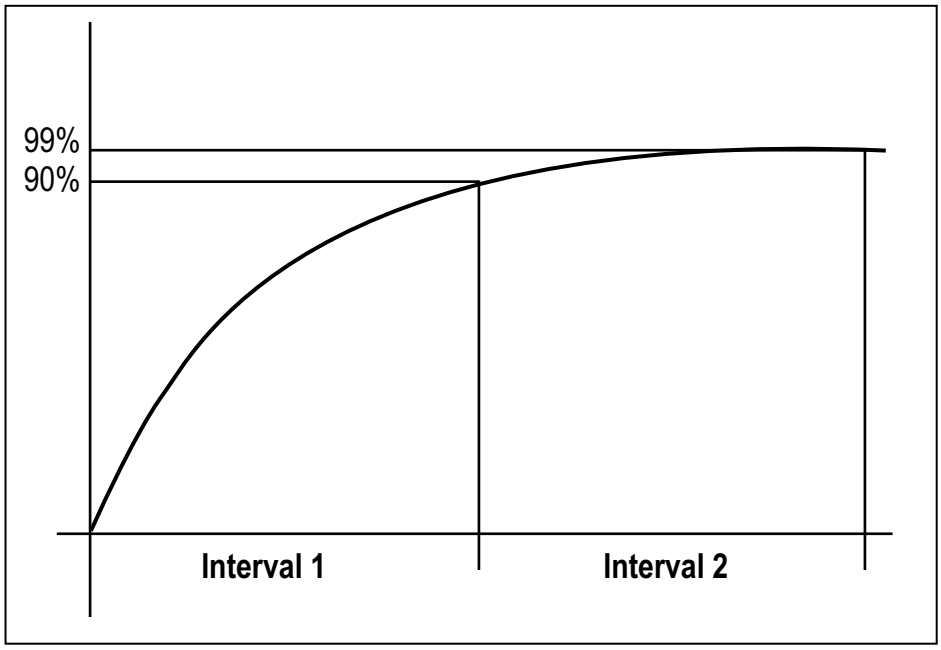

Energy :

The meter offers dual energy monitoring of electricity board and DG sets and energy data can be accessed and reset via communication or from the meter front.

Accumulated energy (Mains and DG Both)

- Active, Apparent, Reactive energy
  - Import - Per phase and Total
  - Export - Per phase and Total
  - Total NET (Import + Export)
  - Total NET (Import – Export)

Last Cleared Energy (Mains and DG Both)

- Active, Apparent, Reactive energy
  - Import - Per phase and Total
  - Export - Per phase and Total
  - Total NET (Import + Export)
  - Total NET (Import – Export)

When any energy value exceeds the maximum value 999999999 GWh, GVArh, GVAh, then that particular energy rolls over and stores the count at modscan address and starts accumulating fresh from 0. Energy unit symbol will change to k/M/G depending on the value

Energy will automatically rollover on display from k_hr to M_hr to G_hr (W, VAr, VA)

Energy pulsing detailed method:

Within specific limits, the meter's energy pulsing LED and pulse outputs are capable of performing energy pulsing.

Energy pulsing at	Maximum pulse frequency	Max. No of Pulses/Sec
LED OUTPUT	40 Hz	36
PULSE OUTPUT	20 Hz	18

Configurable Pulse width : 1 to 9999000 (per k_h)

Note: Pulse duration is fixed for LED output is 25ms and for POP output is 50ms

Calculation to allow the energy pulsing at LED output

LED Output will increment only if the Total number of pulses is more than configured pulse width otherwise the LED pulsing count will be 0.

Total No of pulses/Hr are calculated as $= \dfrac{\text{Max. No of Pulses/ Sec X 3600}}{\text{Total Power}}$

$= \dfrac{36 \text{ X } 3600}{3.6\ (kW_{Total})}$

$= 36000/Hr$

Configured pulse width	Condition	LED output
10	Total No of pulses > Pulse Width	LED Pulsing will start incrementing as per observed energy
10000	Total No of pulses > Pulse Width	LED Pulsing will start incrementing as per observed energy
37000	Total No of pulses < Pulse Width	LED Pulsing will not start incrementing. Remains OFF.

The LED pulse count is dependent on the configured pulse width in relation to the incrementing energy as below table.

Sr No.	Configured LED Pulse Width	Energy in kWh	LED pulse count
1	1	1.000	1
2	10	0.100	1
3	100	0.010	1
4	1000	0.001	1
5	10000	0.001	10
6	100000	0.001	100
7	1000000	0.001	1000
8	9999000	0.001	10000

Calculation to allow the energy pulsing at POP output

Pulse Output will increment only if the Total number of pulses is more than configured pulse width otherwise the POP count will be 0.

Total No of pulses/Hr are calculated as $= \dfrac{\text{Max. No of Pulses/ Sec X 3600}}{\text{Total Power}}$

$$= \frac{18 \text{ X } 3600}{3.6\ (kW_{Total})}$$

$$= 18000/Hr$$

Configured pulse width	Condition	LED output
10	Total No of pulses > Pulse Width	POP will start incrementing as per observed energy
10000	Total No of pulses > Pulse Width	POP will start incrementing as per observed energy
19000	Total No of pulses < Pulse Width	POP will not start incrementing

The POP count is dependent on the configured pulse width in relation to the incrementing energy as below table.

Sr No.	Configured POP Pulse Width	Energy in kWh	POP count
1	1	1.000	1
2	10	0.100	1
3	100	0.010	1
4	1000	0.001	1
5	10000	0.001	10
6	100000	0.001	100
7	1000000	0.001	1000
8	9999000	0.001	10000

Real time clock:

The meter supports with real time clock. The RTC parameters are Date and Time shown in the form of DD:MM:YY and HH:MM:SS respectively.

The RTC parameters data can be accessed via communication or from the meter front.

RPM:

Meter provides the measurement of rotational speed of motor. Usually displays value in terms of RPM.

The speed a synchronous motor will run can be determined by the number of poles of the motor and the frequency of the

electrical service using. No of poles are settable through communication or from the meter front.

ON Hour :

ON hour shows how long the meter has been powered up. ON hour data an be accessed via communication or from the meter front under Self-Test mode.

Import Run Hour- Mains :

Load run hours show how much time a load has been running, based on accumulated energy – Import (Delivered) of Mains supply. Run hour Import Mains data can be accessed and reset via communication or from the meter front under Self-Test mode.

Export Run Hour- Mains :

Load run hours show how much time a load has been running, based on accumulated energy – Export (Received) of Mains supply. Run hour Export Mains data can be accessed and reset via communication or from the meter front under Self-Test mode.

Import Run Hour- DG :

Load run hours show how much time a load has been running, based on accumulated energy – Import (Delivered) of DG supply. Run hour Import DG data can be accessed and reset via communication or from the meter front under Self-Test mode.

Export Run Hour- DG :

Load run hours show how much time a load has been running, based on accumulated energy – Export (Received) of DG supply. Run hour Export DG data can be accessed and reset via communication or from the meter front under Self-Test mode.shows how long a load has been running, based upon the load timer set point set in communication. (Minimum current). data can be accessed and reset via communication or from the meter front underSelf-Test mode.

Load Run Hour :

Load run hour shows how long a load has been running, based upon the load timer set point set in communication. (Minimum current). Load run hour data can be accessed and reset via communication or from the meter front under Self-Test mode.

Auxiliary Interrupts :

Auxiliary interrupts shows number of auxiliary supply interruptions. Auxiliary Interrupts data can be accessed and reset via communication or from the meter front under Self-Test mode

Voltage Sequence Detection :

Meter performs the analysis of the input voltage signals. It detect the wrong phase sequence or failure of one of the input voltage and displays result upon pressing key for 3 seconds.

1. OK Phase sequence - **"Clockwise"**
2. Wrong phase sequence - **"Anticlockwise"**
3. Failure of one of the input voltage - **"Invalid"**

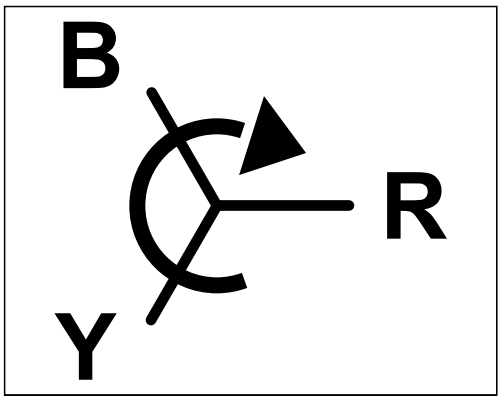

CLOCKWISE

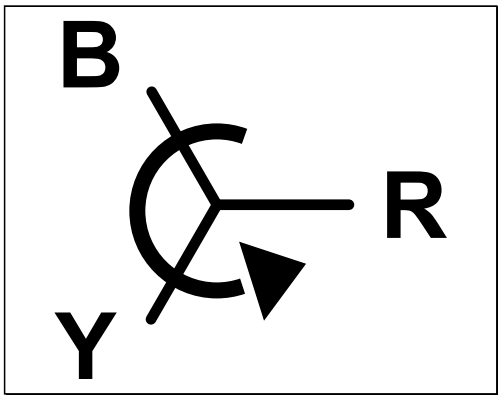

ANTI-CLOCKWISE

Current Polarity (CT Reversal Detection and Correction)

The meter supports a setting that allows user to changes the current polarity in the meter via communication and from panel in Configuration mode. This is beneficial is the CT's have been installed in the reverse direction polarity.

Configure the CT through the front panel according to the CT polarity shown on the current reversal detection page. With Changing the current polarity to negative is basically changing the phase angle of the current by 180 degrees, making it possible to correct any installation errors. There is no need to change the physical wiring.

By default The current direction is configured to positive for CT1, CT2 and CT3 i.e., NONE.

Upon pressing the key for 5 seconds, the Current Reversal detection page will appear with the CT number of the input current that is reversed in polarity.

1. 1st phase CT polarity has reverse connection **"1"**
2. 1st and 2nd phase CT polarity has reverse connection. **"12"**
3. 1st ,2nd ,3rd phase CT polarity has reverse connection. **"123"**

Note: CT polarity correction should be referred when input active power is positive.

FIRMWARE UPGRADE

The meter supports on-site firmware upgrades for adding new functionality to the meter using separate downloader software.

Procedure for Firmware upgradation.

1. Go to www.selec.com to download the separate Downloader-software for MFM384+.
2. Download the newly uploaded firmware file (Extension is XYZ.bin) from www.selec.com
3. Connect the Meter to PC through RS485 communication.
4. Open Separate Downloader.
5. Check the communication setting of Meter has properly select in Downloader utility.
6. Select the COM port of PC
7. Browse the firmware saved location path from your PC.
8. Select .bin file and then Click – Open
9. Press key of Meter then Powered UP the Meter and then release the key.
10. Meter will enter in Boot loader mode. On display it will shows "BOOT"
11. Click on Download to download the upgraded firmware into Meter.
12. Downloading will start and Meter will show the current downloading progress (in percent complete upto 100%) on display panel.
13. When the firmware upgrade is complete,Seperate downloader will shows "Download of Bin file is successful".
14. After downloading the firmware, the meter will restart automatically.
15. Check the upgraded firmware version number under Self Test mode.

Note: Only one Meter can be upgrade at a one time from same PC.
Separate Downloader is a program by the software company SELEC
Entry of Boot loader mode can be accessed via communication or from the meter front.

Specifications are subject to change, since development is a continuous process.