Dual Display, Multifunction Timers

DXT241

72 x 72mm

Features :

- 3+3 digits, 7 Segment LED, Dual display
- Multifunction, Multi-range Timer
- Single set point
- Compact size

Technical specifications

Display specifications	
Display	3 digits, 7 segment LED, Dual display Height of Upper Display: 0.3785" Height of Lower Display: 0.2720"
LED indication	Relay: R, Seconds (S), Minutes (M), Hours (H)
Input specifications	
Accuracy	Setting: ±0.05 % of set time or 50msec (Whichever is greater), Repeat: ±0.05%
Start input	Gate/ Pulse (Programmable)
Output specifications	
Contact rating	Relay: NO: 10A 250 VAC/ 24 VDC NO/ NC: 5A/ 5A 250 VAC/ 24 VDC
Relay contact	2X SPDT
Functional specifications	
Modes	ON delay, Interval, Cyclic ON first, Cyclic OFF first
Time ranges	9.99/ 99.9/ 999 sec, 9.59 min: sec, 99.9/ 999 min, 9.59 hour: min, 99.9/ 999 hr
Resolution	0.01sec
Counting direction	Up/ Down (selectable)
Set point	1
Time setting	By keys on front panel
Reset	Front, Remote, On power interruption (programmable)
Memory retention	10 years
Configuration lock	Yes
Auxiliary supply specifications	
Supply voltage	90 to 270 VAC/ DC (50/ 60Hz)
Power consumption	5 VA max @270 VAC/ DC
Environment specifications	
Temperature	Operating: 0 to 50°C (32 to 122°F) Storage: - 20 to 75°C (- 4 to 167°F)
Humidity (non - condensing)	95% RH
Mechanical specifications	
Mounting	Panel mount
Weight	165 gms

Terminal connections

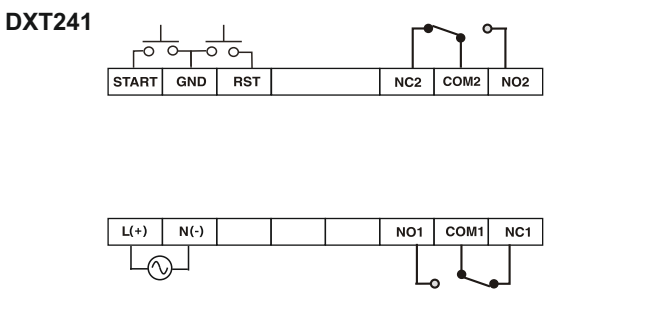

Timing diagrams

1. On delay, Interval modes :

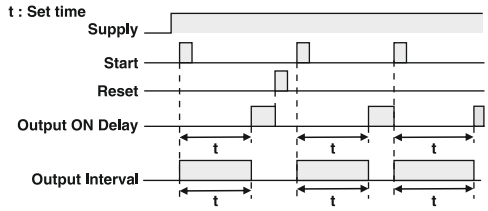

2. Cyclic ON first, Cyclic OFF first modes :

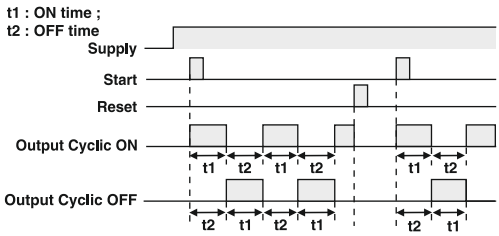

3. Typical application of Continuous start and reset and in On delay mode :

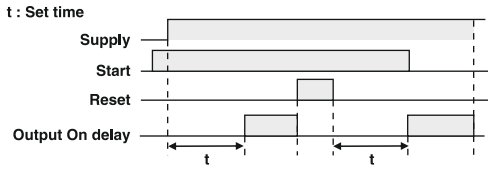

4. Typical application of Gate start :

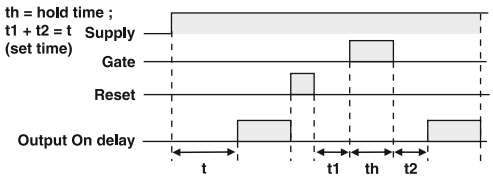

Dimensions (All are in mm)

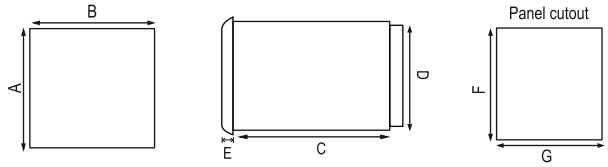

MODELS	A	B	C	D	E	F	G
DXT241	76	76	44	67	4	69	69

Ordering information

Product code	Output1	Output2	Supply voltage	Certification
DXT241	RELAY (5A)	RELAY (5A)	90 to 270 VAC/ DC	- - -