Dimensions (All are in mm)

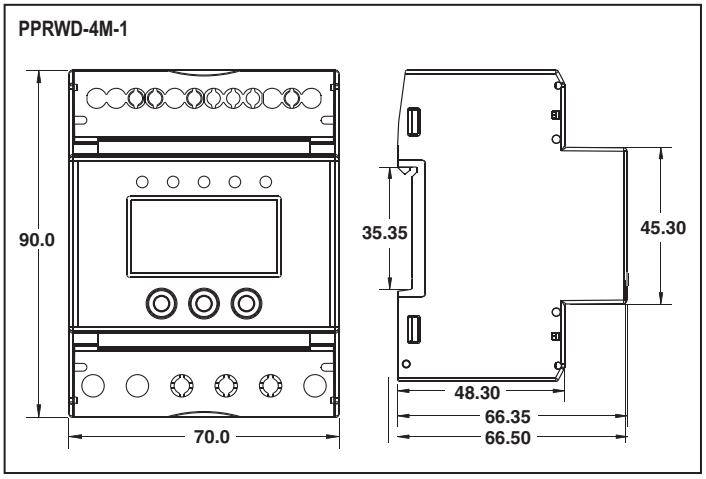

Connection Diagram

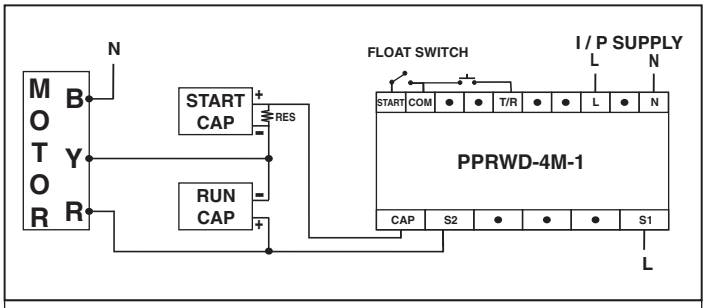

Note : - Resistor is used to discharge start capacitor in 30sec.

Recommended resistor value as per different motor rating	
Start Capacitor Value	**Resistor Value**
Upto 200uF/300VAC	100kOhm/2W

(Minimum 30sec delay required between two consecutive starts.)

Ordering Information

Product code	Supply voltage	Certification
PPRWD-4M-1	180 to 300V AC (L - N)	---