[redacted]

COM

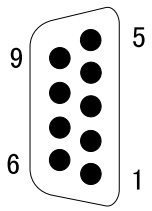

Interface	PIN	PIN Definition
COM2	1	——
	2	RS232 RXD
	3	RS232 TXD
	4	——
	5	GND
COM1	6	——
	7	RS485+(A)
	8	RS485 - (B)
	9	——

Caution:
In RS485 communication, out of Serial Port & Communication Terminal, only one can be chosen. Two of them can't be used at the same time.

Terminal

Communication Terminal is a 4 pin removable terminal, which supports RS485 communication. A built-in 120 ohm resistance is used for longer distance communication (more than 300-meters), user can manually short Pin 1 & Pin 2 to suppress communication interference.

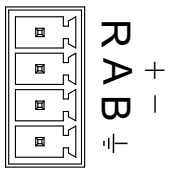

Port	PIN	Pin Definition	Remarks
COM1	1	R	120Ω Terminal resistance
	2	RS485 +	(A)
	3	RS485 -	(B)
	4	PE	Shield ground

HMI

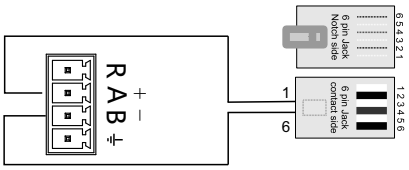

RS485,Terminal connection

Flexys Rail DIGIX-B

Ethernet

[redacted]

Remarks: **Default IP** is **192.168.1.100**

USB Host Port

[redacted]

USB Host Port

[redacted]

Device Interfacing

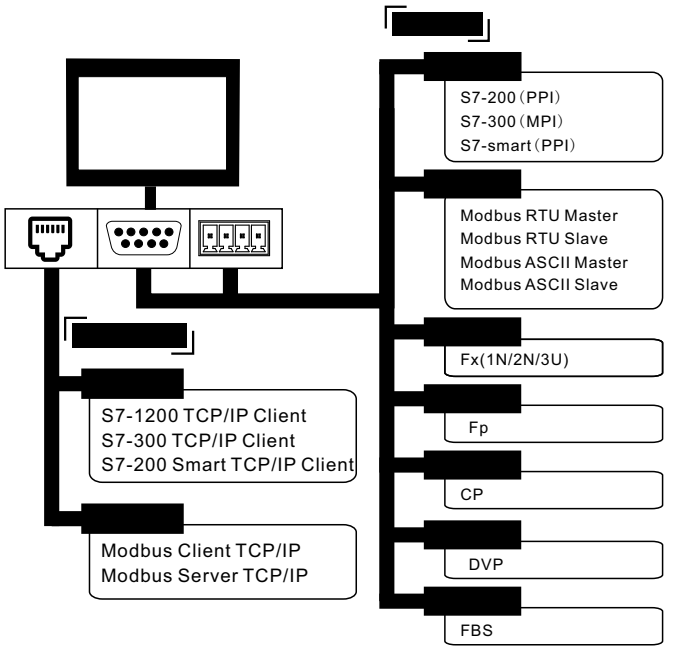

Ordering Information

[redacted]